HYDRAULIC & PNEUMATIC

空、油壓缸
PNEU. & HYD. CYLINDER

特殊規格、特殊用途的油壓缸，亦可製造，接受訂單。
We are always ready to accept customers' special specification & special purpose in Hydraulic Cylinder, please contact us.

製造能力：
內徑⌀1000mm, 行程6000mm,最高使用壓力420Bar.
Manufacturing Capacity:
Internal Diameter⌀1000mm, Stroke:6000mm. Max. Pressure:420Bar.

例如:耐高溫，耐低溫；耐酸鹼，化學機械，食品機械，檢驗測試機械，建設機械，船舶上等使用的油壓缸。
Such as:it can be available to bear the high temperature & low temperature, acid proof and salty which is used for various equipments; like: chemical machinery, food machinery, inspection tests machinery, construction machinery, and shipping etc.

我們有20年以上的專業技術與製造上的累積經驗，歡迎洽詢。
We have had over two decades of professional technique and manufacture experience in hydraulic cylinder products and customers' consult are welcomed.

空壓缸 Pneu. Cylinder

氣缸理論出力之公式計算

Formula Calculating For Theoretical Cylinder Output

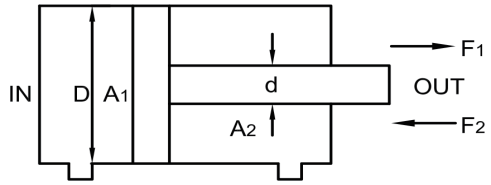

氣缸之理論出力一般計算是依照理想狀態下，其內部摩擦損失及壓力損失等不計，其公式如下：

In general,the theoretical cylinder output which is calculated under ideal condition and the inner friction loss & pressure loss etc,are not calculated.The calculating formula is as follows：

$F1=A1 \cdot P \quad A1=\pi/4\ D^2$

$F2=A2 \cdot P \quad A2=\pi/4\ (D^2-d^2)$

F12=氣缸理論出力/Theoretical cylinder output(kg)

A=氣缸面積/Area of cylinder(cm^2)

D=氣缸內徑/Bore dia.of cylinder(cm)

d=活塞桿外徑/Outside dia.of piston rod(cm)

P=壓力源(空氣壓源或油壓源)(kgf/cm^2)

Pressure source (Pnen, pressure source or hyd. pressure source)

[例]：設一氣缸內徑Ø40mm，使用壓力5kgf/cm^2，試求其往後理論出力多少？

For example：There is a cylinder dia.Ø40mm and output 5kgf/cm^2, how to derive the theoretical output？

$A1=\pi/4\times4^2=12.57cm^2$

$A2=\pi/4\times(4^2-1.6^2)=10.56cm^2$

$\therefore F1=12.57\times5=62.9kgf$

$F2=10.56\times5=52.8kgf$

[例]：設使用壓力5kgf/cm^2，其推力之理論出力40.2kgf時，試求其內徑？

For example：There is a operating pressure 5kgf/cm^2 and the theoretical output 40.2kgf. How to derive the bore dia. of cylinder：

F1=40.2

$\therefore A1=40.2\div5=8.04cm^2$

$\therefore D=(8.04\times4/\pi)^{1/2}=3.2cm$

空氣壓氣缸理論出力參照表

Theoretical Output Refer Table For Pneu.Cylinder

缸徑 Bore dia.	活塞缸 Rod size	使用壓力 Operating Pressure kgf/cm^2								
		2	3	4	5	6	7	8	9	10
		in out	in out	in out	in out	in out	in out	in out	in out	in out
Ø20	10	4.7 6.3	7.1 9.4	9.4 12.6	11.8 15.7	14.1 18.8	16.5 22.0	18.8 25.1	21.2 28.3	23.5 31.4
Ø25	12	7.7 9.8	11.3 14.7	15.1 19.6	18.9 24.6	22.7 29.5	26.4 34.4	30.2 39.3	34 44.2	37.8 49.1
Ø30	12	12.2 14.2	18.3 21.3	24.4 28.4	30.5 35.5	36.6 42.6	42.7 49.7	48.8 56.8	54.9 63.9	61.1 71.1
Ø40	16	21.1 25.1	31.7 37.7	42.2 50.3	52.8 62.8	63.3 75.4	73.9 88	84.4 101	95 113.1	105.6 125.7
Ø50	20	33 39.3	49.5 58.9	66 78.5	82.5 98.2	99 117.8	115.5 137.4	131.9 157.1	148.4 176.7	164.9 196.3
Ø63	20	56.1 62.3	84.1 93.5	112.1 124.7	140.2 155.9	168.2 187	196.2 218	224 249	252 281	280 312
Ø80	25	90.7 100.5	136.1 150.8	181.4 201	227 251	272 302	317 352	363 402	408 452	454 503
Ø100	30	142.9 157.1	214 236	286 314	357 393	429 471	500 550	572 628	643 707	715 785
Ø125	35	225 245	338 368	450 491	563 615	675 736	788 859	900 982	1013 1104	1125 1227
Ø150	35	377 402	565 603	754 804	942 1005	1131 1206	1319 1407	1508 1608	1696 1810	1885 2011
Ø200	50	589 628	884 942	1178 1257	1473 1571	1767 1885	2062 2190	2356 2513	2651 2827	2945 3142
Ø250	60	925 982	1388 1473	1850 1963	2313 2454	2776 2945	3238 3436	3701 3927	4163 4418	4626 4909
Ø300	70	1337 1414	2005 2121	2673 2827	3342 3534	4040 4241	4679 4948	5347 5655	6015 6362	6684 7069

[例]：實際出力計算

1.若空氣缸內徑Ø80mm時，查理論出力參照表得空氣缸推出時為251kg

2.因此實際出力為251kg×0.8=200.8kg

For Example：The calculating for practical output.

1.If the bore size is Ø80mm and from theoretical output refering data. The pneu.cylinder delivery is 251kg.

2.From above we can derived the practical output is 251kg×0.8=200.8kg

空壓缸之空氣消耗量

Air Consumption For Pneu.Cylinder

空壓缸之空氣消耗量可由下列公式計算：

The air consumption for pneu.cylinder can be calculated by following formula：

$Q_1=0.00076\times(D_1^2 \cdot L+d^2 \cdot \ell)\times(P+1.033)\times n(\ell/min)$

$Q_2=0.00076\times \{ (D_1^2-D_2^2) \cdot L+d^2 \cdot \ell \}$

$Q = Q_1+Q_2(\ell/min)$

Q = 空壓缸每分鐘之空氣消耗量 / Air consumption per minute(ℓ/min)

Q_1 = 空壓缸推出時空氣消耗量 / Air consumption for forward stroke(ℓ/min)

Q_2 = 空壓缸退回時空氣消耗量 /Air consumption for backward stroke(ℓ/min)

D_1 = 空壓缸內徑 / Inside diameter of pneu.cylinder(cm)

D_2 = 活塞桿外徑 / Outside diameter of piston rod(cm)

d = 配管內徑 / Piping inside diameter(cm)

L = 空壓缸衝程長度 / Stroke of pneu.cylinder(cm)

ℓ = 配管長度 / Piping length(cm)

n = 空壓缸每分鐘往復次數 / Frequency of operation of pneu.cylinder(cycle/min)

p = 空氣管路壓力 / Air line pressure/Air line pressure(kgf/cm² G)

空壓缸每分鐘往復次數之空氣消耗量(ℓ/min)

Air Consumption For Reciprocating Times Of Pneu.Cylinder

次數 Frequency 缸徑 Bore dia.	1	2	3	4	5	8	10	15	20	25	30
Ø40	1.4	2.8	4.2	5.6	7	11.2	14	21	28	35	42
Ø50	2.1	4.2	6.3	8.4	10.5	16.8	21	31.5	42	52.5	63
Ø63	3.5	7	10.5	14	17.5	28	35	52.5	70	87.5	105
Ø80	5.6	11.2	16.8	22.4	28	44.8	56	84	112	140	168
Ø100	8.8	17.6	26.4	35.2	44	70.4	88	132	176	220	264
Ø125	13.8	27.6	41.4	55.2	69	110.4	138	207	276	345	414
Ø150	22.7	48.4	68.1	90.8	113.5	181.6	227	340.5	454	567.5	681
Ø200	35.5	71	106.5	142	177.5	284	355	532.5	710	887.5	1065
Ø250	55.7	111.4	167.1	222.8	278.5	445.6	557	835.5	1114	1392.5	1671
Ø300	80.3	160.6	240.9	321.2	401.5	642.4	803	1204.5	1606	2007.5	2409

註：本表之計算值係基於：

1.空氣壓力為5kgf/cm² G。

2.空壓缸衝程為100m/m，配管內徑，長度不算計在內。

Remarks：The above table's calculating value is based on

1.If the bore size is Ø80mm and from theoretical output refering data. The pneu.cylinder delivery is 251kg.

2.From above we can derived the practical output is 251kg×0.8=200.8kg

CM Series Mini Cylinder

Dia.：Ø20，Ø25，Ø30，Ø40

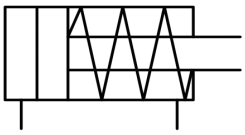

單動
Single Acting

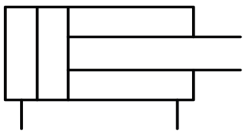

複動
Double Acting

特性說明：

1.採用鋁金管(Cylinder tube)內表面經過陽極處理，活塞壽命高。

2.前後氣缸蓋採用鋁製，重量輕。

3.CNS加工製造，精度高。

DESIGN FEATURES

*Hard anodized aluminum cylinder tube resists corrosion and abrasion. With 20 micron hard aluminum oxide film providing minimum friction and assuring long seal life.

*Major parts employ aluminum alloy so are light weight,rust proof, miniatured with low piston inertia.

*Employs oil-filled sintered bronze bushing which self-lubricates the piston rod during each stroke.

*Unified design,most parts of each type are intrechangeable among each other.

*CNC machined parts ensure high precision,excellent workmanship, and good interchangeability.

動作 Acting	缸徑 Size	標準行程/Standard Stroke(mm)									
		25	50	75	100	125	150	175	200	250	300
複動 Double Acting	Ø20										
	Ø25										
	Ø30										
	Ø40										
單動 Single Acting	Ø20										
	Ø25										
	Ø30										
	Ø40										

註：1.著色者為標準行程。
2.特殊行程，歡迎洽詢訂購。

Remarkes：1.The shadow is represented the standard stroke.
2.Special stroke available on request.

CMSD Type 基本型

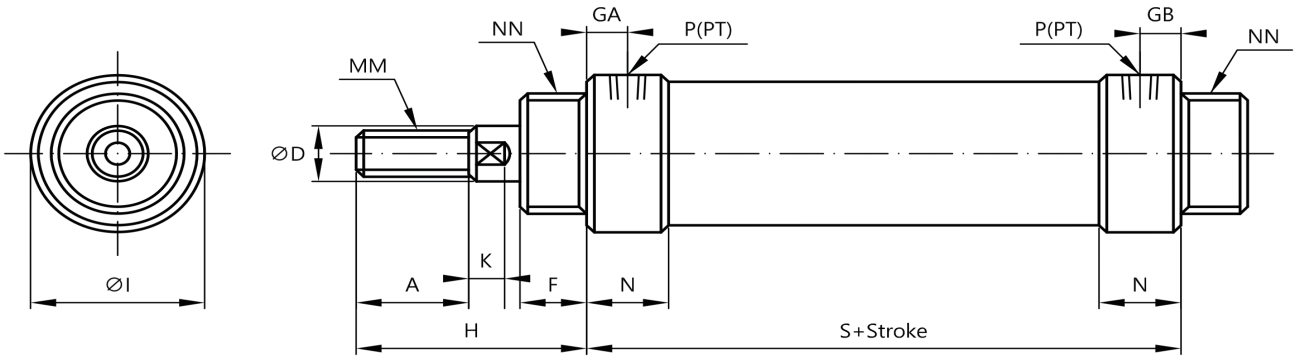

複動 Double Acting

缸徑 Bore dia.	行程範圍 Stroke range	A	ØD	F	GA	GB	ØI	K	MM	N	NN	P	S	H
Ø20	-200	18	10	13	8	8	28	5	M8×1.25	16	M20×1.5	1/8”	68	41
Ø25	-300	22	12	13	8	8	34	7	M10×1.25	16	M26×1.5	1/8”	68	45
Ø30	-300	22	12	13	8	8	38	7	M10×1.25	16	M26×1.5	1/8”	68	45
Ø40	-300	24	16	16	11	11	50	8	M12×1.25	22	M32×2.0	1/4”	89	50

單動 Single Acting

缸徑 Bore dia.	行程範圍 Stroke range	A	ØD	F	GA	GB	ØI	K	MM	N	NN	P	S				H
													25	50	75	100	
Ø20	-100	18	10	13	8	8	28	5	M8×1.25	16	M20×1.5	1/8”	85	103	127	-	41
Ø25	-100	22	12	13	8	8	34	7	M10×1.25	16	M26×1.5	1/8”	85	98	120	-	45
Ø30	-100	22	12	13	8	8	38	7	M10×1.25	16	M26×1.5	1/8”	88	105	124	150	45
Ø40	-100	24	16	16	11	11	50	8	M12×1.25	22	M32×2.0	1/4”	99	124	137	153	50

CMFA Type 前後端固定型

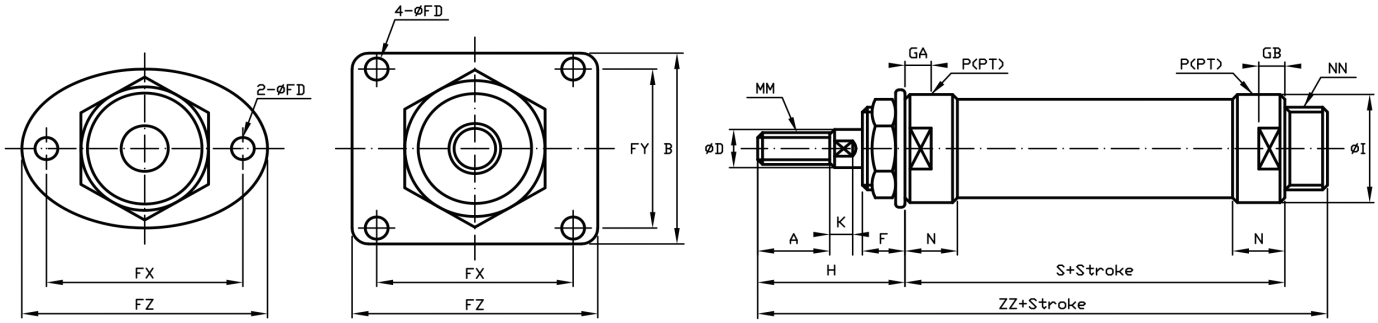

複動 Double Acting

缸徑 Bore dia.	行程範圍 Stroke range	A	ØD	F	GA	GB	ØI	K	MM	N	NN	P	S	H	ØFD	B	FX	FY	FZ
Ø20	-300	18	10	13	8	8	28	5	M8×1.25	16	M20×1.5	1/8”	68	41	7	-	62	-	75
Ø25	-300	22	12	13	8	8	34	7	M10×1.25	16	M26×1.5	1/8”	68	45	7	-	62	-	75
Ø30	-300	22	12	13	8	8	38	7	M10×1.25	16	M26×1.5	1/8”	68	45	7	-	62	-	75
Ø40	-300	24	16	16	11	11	50	8	M12×1.25	22	M32×2.0	1/4”	89	50	7	52	66	36	82

單動 Single Acting

缸徑 Bore dia.	行程範圍 Stroke range	A	ØD	F	GA	GB	ØI	K	MM	N	NN	P	S				H
													25	50	75	100	
Ø20	-300	18	10	13	8	8	28	5	M8×1.25	16	M20×1.5	1/8”	85	103	127	-	41
Ø25	-300	22	12	13	8	8	34	7	M10×1.25	16	M26×1.5	1/8”	85	98	120	-	45
Ø30	-300	22	12	13	8	8	38	7	M10×1.25	16	M26×1.5	1/8”	88	105	124	150	45
Ø40	-300	24	16	16	11	11	50	8	M12×1.25	22	M32×2.0	1/4”	99	124	137	153	50

CMLB Type 平置型

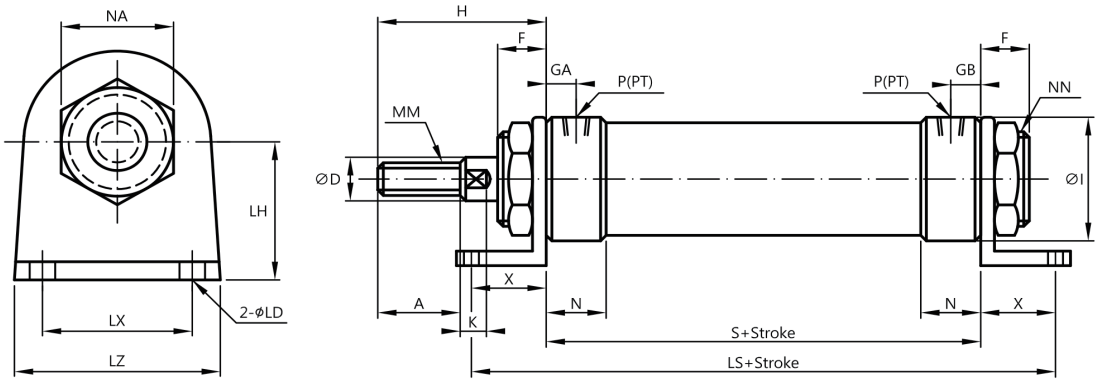

複動 Double Acting

缸徑 Bore dia.	行程範圍 Stroke range	A	ØD	F	GA	GB	ØI	K	MM	N	NA	NN	PT	S	X	ØLD	LH	LS	LX	LZ	H
Ø20	-300	18	10	13	8	8	28	5	M8×1.25	16	24	M20×1.5	1/8”	68	20	6.8	25	108	40	55	41
Ø25	-300	22	12	13	8	8	34	7	M10×1.25	16	30	M26×1.5	1/8”	68	20	6.8	28	108	40	55	45
Ø30	-300	22	12	13	8	8	38	7	M10×1.25	16	32	M26×1.5	1/8”	68	20	6.8	28	108	40	55	45
Ø40	-300	24	16	16	11	11	50	8	M12×1.25	22	46	M32×2.0	1/4”	89	23	7.0	30	135	55	75	50

單動 Single Acting

缸徑 Bore dia.	行程範圍 Stroke range	A	ØD	F	GB	ØI	K	MM	N	NN	P	S						LS						X	ØLD	LH	LT	LX	LZ	H
												25	50	75	100	125	150	25	50	75	100	125	150							
Ø20	-300	18	10	13	8	28	5	M8×1.25	16	M20×1.5	1/8”	85	103	127	-	-	-	125	150	175	-	-	-	20	6.8	25	3.2	40	55	41
Ø25	-300	22	12	13	8	34	7	M10×1.25	16	M26×1.5	1/8”	85	98	120	-	-	-	125	150	175	-	-	-	20	6.8	28	3.2	40	55	45
Ø30	-300	22	12	13	8	38	7	M10×1.25	16	M26×1.5	1/8”	88	105	124	150	-	-	128	153	178	190	-	-	20	6.8	28	3.2	40	55	45
Ø40	-300	24	16	16	11	50	8	M12×1.25	22	M32×2.0	1/4”	99	124	137	153	174	191	143	168	193	199	220	237	23	7.0	30	3.2	55	75	50

CMCA Type 吊耳型

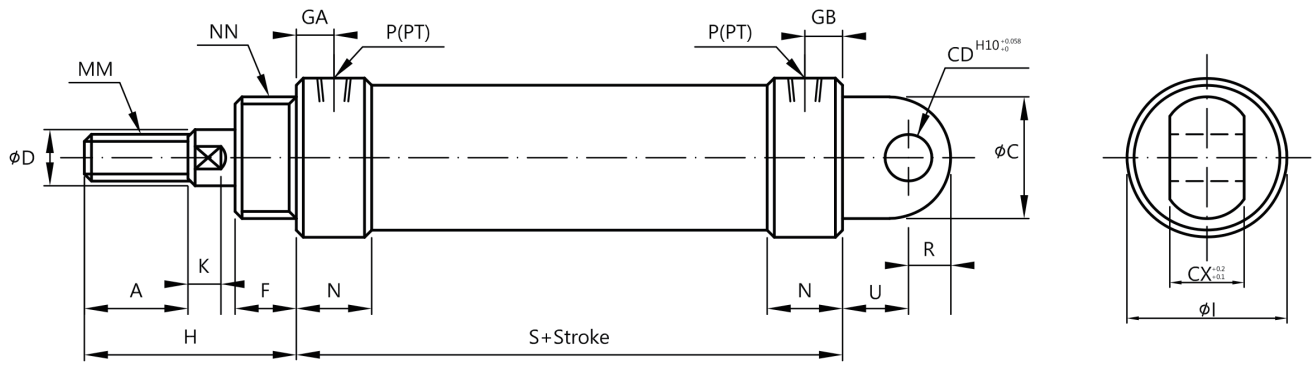

複動 Double Acting

缸徑 Bore dia.	行程範圍 Stroke range	A	ØD	F	GA	GB	ØI	K	MM	N	ØC	NN	P PT	S	U	ØCD	CX	R	H
Ø20	-300	18	10	13	8	8	28	5	M8×1.25	16	20	M20×1.5	1/8”	68	14	8	10	9	41
Ø25	-300	22	12	13	8	8	34	7	M10×1.25	16	26	M26×1.5	1/8”	68	14	10	10	9	45
Ø30	-300	22	12	13	8	8	38	7	M10×1.25	16	26	M26×1.5	1/8”	68	14	10	10	9	45
Ø40	-300	24	16	16	11	11	50	8	M12×1.25	22	32	M32×2.0	1/4”	89	18	12	15	11	50

單動 Single Acting

缸徑 Bore dia.	行程範圍 Stroke range	A	ØD	F	GB	ØI	K	MM	N	ØC	NN	P	S						U	ØCD	CX	H
													25	50	75	100	125	150				
Ø20	-75	18	10	13	8	28	5	M8×1.25	16	20	M20×1.5	1/8”	85	108	129	-	-	-	14	9	10	41
Ø25	-75	22	12	13	8	34	7	M10×1.25	16	26	M26×1.5	1/8”	85	98	120	-	-	-	14	9	10	45
Ø30	-100	22	12	13	8	38	7	M10×1.25	16	26	M26×1.5	1/8”	88	105	124	150	-	-	14	9	10	45
Ø40	-150	24	16	16	11	50	8	M12×1.25	22	32	M32×2.0	1/4”	99	124	139	153	174	-191	18	10	15	50

I 接頭(I Adapter)

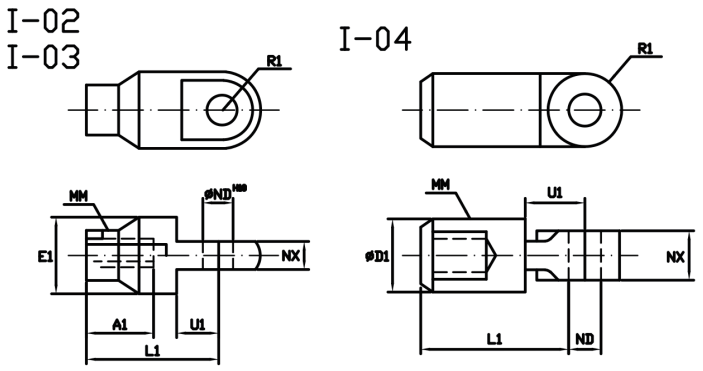

Y 接頭(Y Adapter)

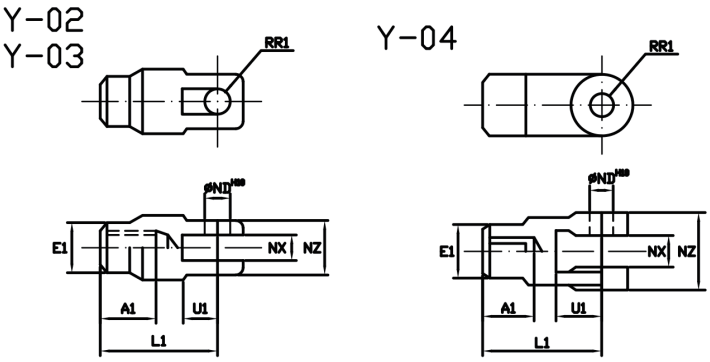

型式 Model	缸徑 Bore dia.	A_1	$ØD_1$	L_1	MM	R_1	E_1	ND^{H10}	NX
I-02	Ø20	16	20	36	M8x1.25	10	14	$9^{+0.058}_{0}$	$9^{-0.1}_{-0.3}$
I-03	Ø25-30	18	20	38	M10x1.25	10	14	$9^{+0.058}_{0}$	$9^{-0.1}_{-0.3}$
I-04	Ø40	22	28	55	M12x1.25	14	20	$12^{+0.070}_{0}$	$16^{-0.1}_{-0.3}$

型式 Model	缸徑 Bore dia.	A_1	$ØE_1$	L_1	MM	RR_1	U_1	ND^{H10}	NX	NZ
Y-02	Ø20	16	20	36	M8x1.25	12	14	$9^{+0.058}_{0}$	9	18
Y-03	Ø25-30	18	20	38	M10x1.25	12	14	$9^{+0.058}_{0}$	9	18
Y-04	Ø40	22	28	55	M12x1.25	14	20	$12^{+0.070}_{0}$	16	44

CMT Super Thin Cylinder
超薄型氣缸

特性：
FEATURES:

超薄型氣缸為治具用氣缸，其特點為行程不長，而整體長度較短，全長僅為一般氣缸之三分之一，不佔空間，其主要功能為零件加工時做夾持工件使用，故被廣泛地應用於各型自動夾具上。

The super thin cylinder is employed as the fixture's cylinder. The displacement is not too long, especially the total cylinder length is very short and the length is just ⅓ of the general cylinder, so that, which occupied little space. It main performance is employed to clamp the workpiece during making processing. Since the super thin cylinder is applied at varions of auto clampings.

範例：
EXAMPLE:

①夾持 Clamping

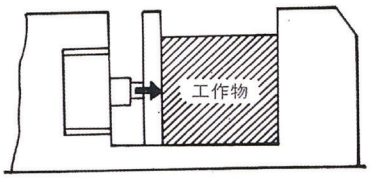

②加工固定 Fixed at processing

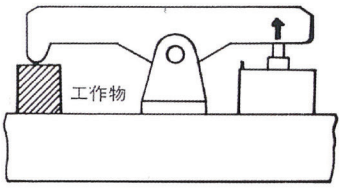

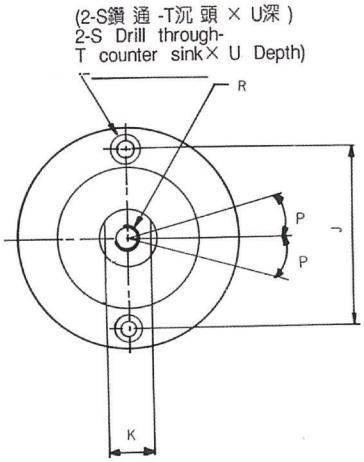

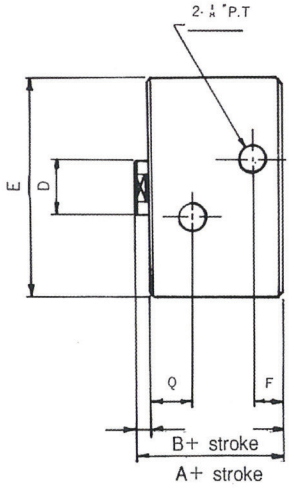

項目 Item / 缸徑 Bore dia.	A	B	D	E	J	K	F	Q	P	S	T	U	R
20	29	25	10	50	36	8	9.3	16.3	30	5.5	10	6	M5×0.8
25	32	28	12	55	42	10	12.3	16.3	30	5.5	10	6	M6×1.0
32	32	28	16	60	48	13	12.3	16.3	30	6.5	11	8	M6×1.0
40	34	30	20	70	56	17	14.3	16.3	15	6.5	11	8	M8×1.25
50	36	32	20	80	66	17	15.3	16.3	15	6.5	11	8	M8×1.25

ISO Series 基本型

基本型 Basic type

※ 固定型式可參考空壓缸CS系列
※ For the fixed type, please refer to the CS series of air cylinders.

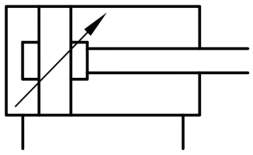

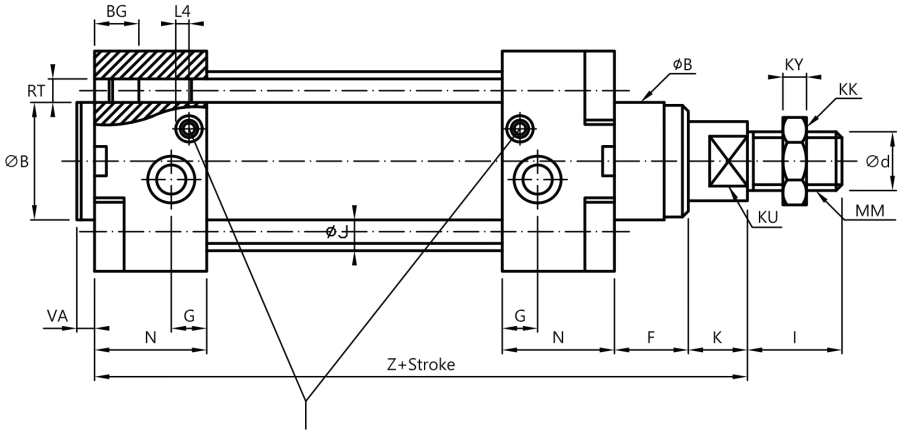

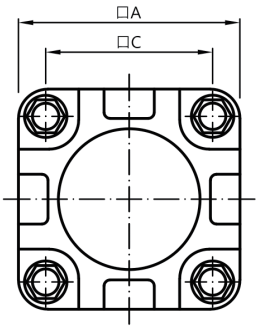

基本型空壓缸
附緩衝裝置
Double acting cylinder which equipped stroke cushioning at both ends

緩衝行程調整螺絲
Adjusting screw for stroke cushioning

緩衝行程
stroke cushioning L4

標準行程/Standard stroke：25、50、80、100、125、150、200、300、400、500

非標準行程可接受訂購
Besides above mentioned strokes which available on request.

※感應缸總長加5mm
The total length for induction cylinder which must added 5mm.

缸徑 Bore dia.	□A	□C	Ød	I	MM	K	F	H	ØB	ØJ	RT	BG	G	N	L4	KY	KX	KU	VA	Z
40	53	38	16	24	M14×1.5	15	20	35	35	6	M6	15	16	34	30	7	19	13	5	137
50	65	46.5	20	32	M16×1.5	20	25	45	40	8	M8	15	11	35	30	8	24	17	6	153
63	75	56.5	20	32	M16×1.5	20	25	45	40	8	M8	15	12	38	30	8	24	17	6	166
80	95	70	25	40	M20×1.5	25	33	58	45	10	M10	12	27	42	35	9	30	22	8	188
100	115	85	25	40	M20×1.5	25	38	63	55	10	M10	12	26	42	35	9	30	22	8	193

ISO Series

Single Acting Cylinder 單軸式

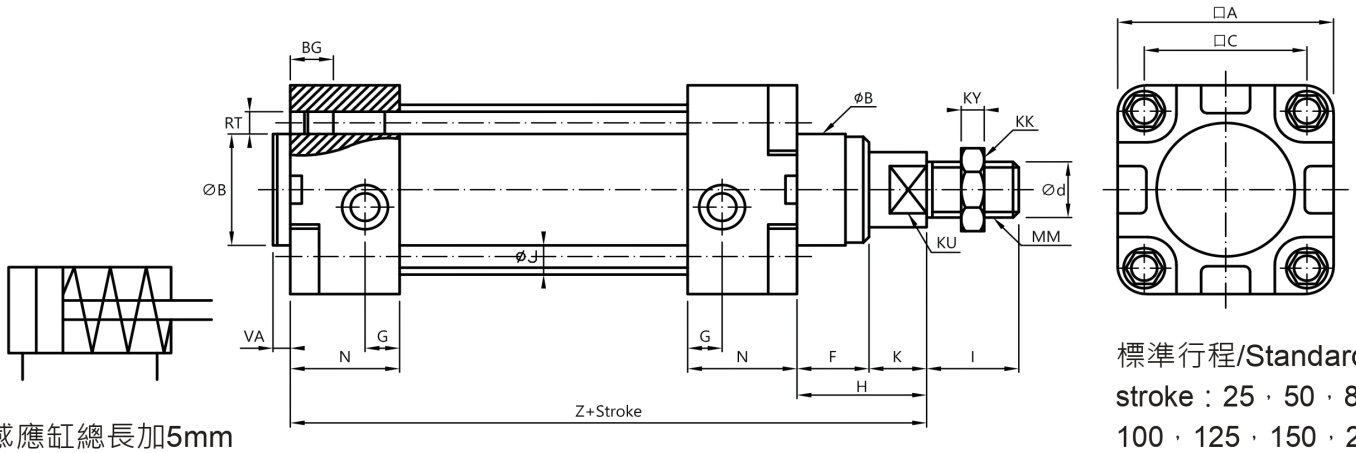

※感應缸總長加5mm
The total length for induction cylinder which must added 5mm.

標準行程/Standard stroke：25、50、80、100、125、150、200、300、400、500

缸徑 Bore dia.	□A	□C	Ød	I	MM	K	F	H	ØB	ØJ	RT	BG	G	N	L4	KY	KX	KU	VA	Z
40	53	38	16	24	M14×1.5	15	20	35	35	6	M6	15	16	34	30	7	19	13	5	160
50	65	46.5	20	32	M16×1.5	20	25	45	40	8	M8	15	11	35	30	8	24	17	6	168
63	75	56.5	20	32	M16×1.5	20	25	45	40	8	M8	15	12	38	30	8	24	17	6	183
80	95	70	25	40	M20×1.5	25	33	58	45	10	M10	12	27	42	35	9	30	22	8	199
100	115	85	25	40	M20×1.5	25	38	63	55	10	M10	12	26	42	35	9	30	22	8	214

Double Acting Cylinder 雙軸式

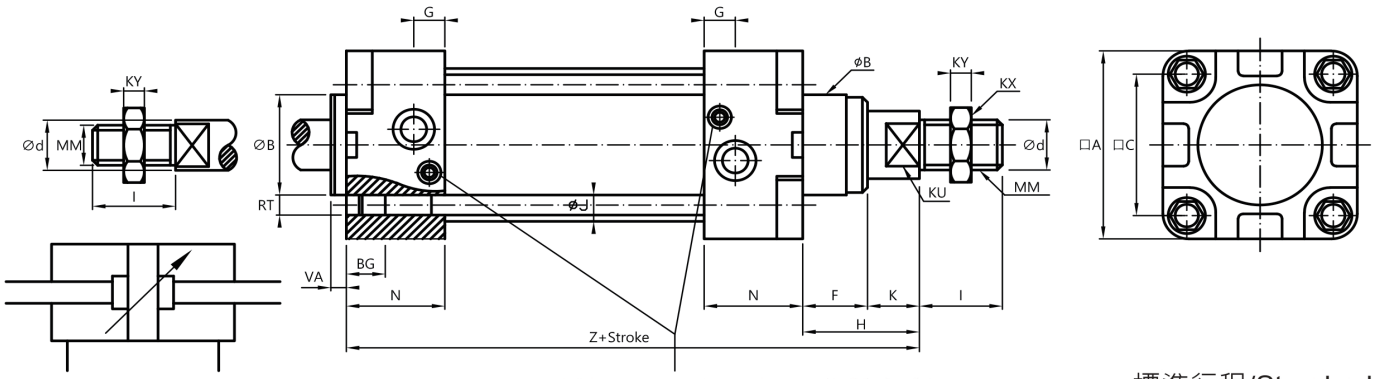

緩衝行程調整螺絲
Adjusting screw for stroke cushioning

緩衝行程
stroke cushioning L4

標準行程/Standard stroke：25、50、80、100、125、150、200、300、400、500

※感應缸總長加5mm
The total length for induction cylinder which must added 5mm.

缸徑 Bore dia.	□A	□C	Ød	I	MM	K	F	H	ØB	ØJ	RT	BG	G	N	L4	KY	KX	KU	VA	Z	ZM
40	53	38	16	24	M14×1.5	15	20	35	35	6	M6	15	16	34	30	7	19	13	5	160	165
50	65	46.5	20	32	M16×1.5	20	25	45	40	8	M8	15	11	35	30	8	24	17	6	168	180
63	75	56.5	20	32	M16×1.5	20	25	45	40	8	M8	15	12	38	30	8	24	17	6	183	195
80	95	70	25	40	M20×1.5	25	33	58	45	10	M10	12	27	42	35	9	30	22	8	199	220
100	115	85	25	40	M20×1.5	25	38	63	55	10	M10	12	26	42	35	9	30	22	8	214	240

CS Series

Dia. : Ø40,Ø50,Ø63,Ø80,Ø100,Ø125,Ø150,Ø180,Ø200,Ø250,Ø300

CSSD Type 基本型 Basic type

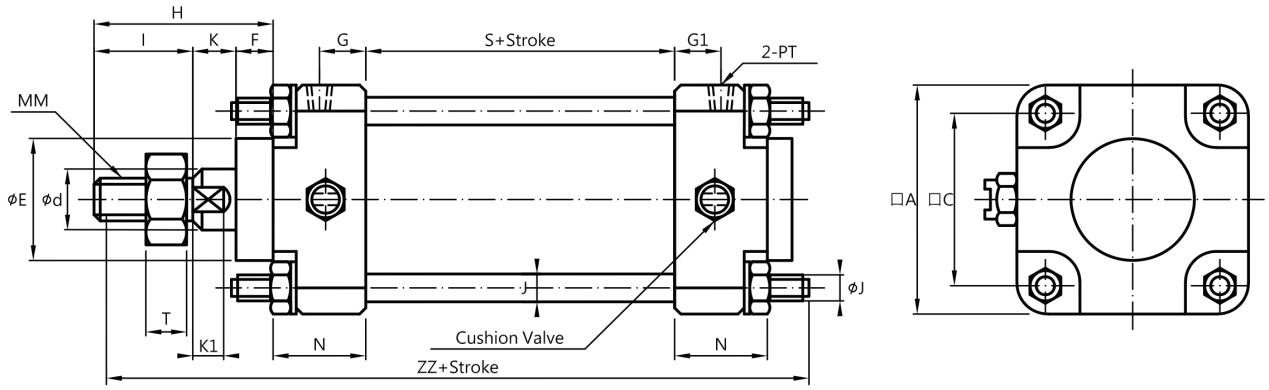

缸徑 Bore dia.	本體相關尺寸 Main body size																	
	□A	□C	Ød	ØE	I	MM	K1	K	F	H	N	G	G1	S	PT	ØJ	ZZ	T
Ø40	53.5	38	16	35	24	M14×P1.5	10	12	20	56	30	12	12	33	1/4”	M6×P1.25	154	10
Ø50	66	47.5	20	40	32	M16×P1.5	10	10	12	54	26	12	12	45	1/4”	M8×P1.25	156	13
Ø63	75	56.5	20	40	32	M16×P1.5	10	10	12	54	30	15	15	45	1/4”	M8×P1.25	164	13
Ø80	95	70	25	50	40	M22×P1.5	12	13	12	65	37	15	15	50	3/8”	M10×P1.5	194	10
Ø100	113	84	30	52	40	M26×P1.5	12	12	15	67	37	15	15	50	3/8”	M10×P1.5	196	13
Ø125	140	115	35	60	40	M30×P1.5	15	17	20	77	40	18	15	64	1/2”	M14×P1.5	226	15
Ø150	171	133	35	60	50	M30×P1.5	15	15	30	95	40	19	18	64	1/2”	M14×P1.5	244	15
Ø180	214	172	50	85	60	M45×P1.5	20	40	25	125	50	25	25	80	3/4”	M18×P1.5	310	10
Ø200	225	182	50	110	60	M45×P1.5	20	40	25	125	50	25	25	80	3/4”	M18×P1.5	310	10
Ø250	275	225	60	120	70	M56×P2	25	50	30	150	50	30	30	80	3/4”	M22×P1.5	335	30
Ø300	330	270	70	120	80	M64×P2	30	60	30	170	55	30	30	80	1”	M30×P1.5	365	30

CSLB Type 平置型 Flat type

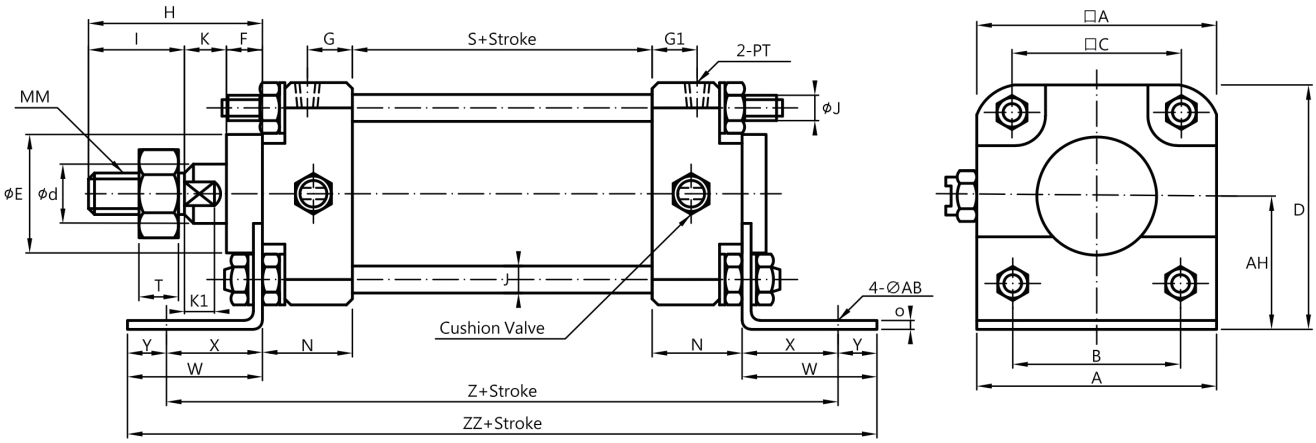

缸徑 Bore dia.	本體相關尺寸 Main body size																按裝相關尺寸 Mounting dimension											
	□A	□C	Ød	ØE	I	MM	K1	K	F	H	N	G	G1	S	PT	ØJ	A	B	AH	D	X	Y	W	ØAB	O	Z	ZZ	T
Ø40	53.5	38	16	35	24	M14×P1.5	10	12	20	56	30	12	12	33	1/4”	M6×P1.25	54	36	36	63	28	11.5	39.5	9	3	149	173	10
Ø50	66	47.5	20	40	32	M16×P1.5	10	10	12	54	26	12	12	45	1/4”	M8×P1.25	68.5	47	40	72	30	11.5	41.5	12	3	157	181	13
Ø63	75	56.5	20	40	32	M16×P1.5	10	10	12	54	30	15	15	45	1/4”	M8×P1.25	80	56	45	82.5	32	13	45	12	3	169	193	13
Ø80	95	70	25	50	40	M22×P1.5	12	13	12	65	37	15	15	50	3/8”	M10×P1.5	98	70	63	110.5	40	17	57	12	4	204	236	10
Ø100	113	84	30	52	40	M26×P1.5	12	12	15	67	37	15	15	50	3/8”	M10×P1.5	118	86	72	128	48	16.5	64.5	12	4	220	254	13
Ø125	140	115	35	60	40	M30×P1.5	15	17	20	77	40	18	15	64	1/2”	M14×P1.5	150	118	90	162.5	44	31	75	18	6	232	294	15
Ø150	171	133	35	60	50	M30×P1.5	15	15	30	95	40	19	18	64	1/2”	M14×P1.5	174	138	105	191.5	44	32	76	18	6	232	296	15
Ø180	214	172	50	85	60	M45×P1.5	20	40	25	125	50	25	25	80	3/4”	M18×P1.5	225	182	132	244.5	60	30	90	24	10	300	360	10
Ø200	225	182	50	110	60	M45×P1.5	20	40	25	125	50	25	25	80	3/4”	M18×P1.5	225	182	132	244.5	60	30	90	24	10	300	360	10
Ø250	275	225	60	110	70	M56×P2	25	50	30	150	50	30	30	80	3/4”	M22×P1.5	275	275	160	297.5	80	40	120	29	13	340	420	30
Ø300	330	270	70	120	80	M64×P2	30	60	30	170	55	30	30	80	1”	M30×P1.5	330	330	200	365	90	40	130	33	15	370	450	30

Front Flange Mounting Type
(CSFA Type)前法蘭型

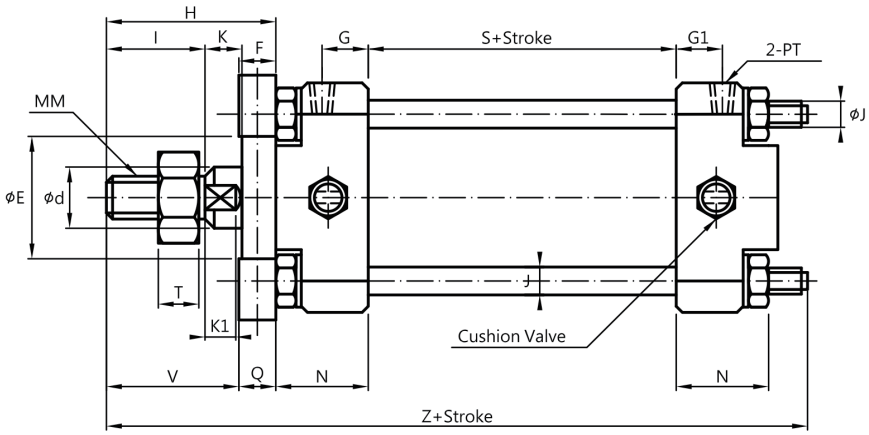

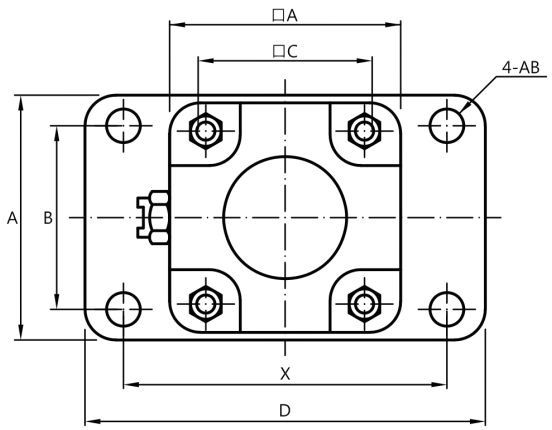

缸徑 Bore dia.	本體相關尺寸 Main body size																按裝相關尺寸 Mounting dimension								
	□A	□C	Ød	ØE	I	MM	K1	K	F	H	N	G	G1	S	PT	ØJ	A	B	D	X	ØAB	Q	V	Z	T
Ø40	53.5	38	16	35	24	M14×P1.5	10	12	20	56	30	12	12	33	1/4”	M6×P1.25	62	42	100	80	9	20	36	154	10
Ø50	66	47.5	20	40	32	M16×P1.5	10	10	12	54	26	12	12	45	1/4”	M8×P1.25	68	50	110	90	9	12	42	156	13
Ø63	75	56.5	20	40	32	M16×P1.5	10	10	12	54	30	15	15	45	1/4”	M8×P1.5	80	60	130	105	11	12	42	164	13
Ø80	95	70	25	50	40	M22×P1.5	12	13	12	65	37	15	15	50	3/8”	M10×P1.5	98	75	160	130	13.5	12	53	194	10
Ø100	113	84	30	52	40	M26×P1.5	12	12	15	67	37	15	15	50	3/8”	M10×P1.5	114	92	180	150	13.5	15	52	196	13
Ø125	140	115	35	60	40	M30×P1.5	15	17	20	77	40	18	15	64	1/2”	M14×P1.5	148	117	220	185	18	20	57	226	15
Ø150	171	133	35	60	50	M30×P1.5	15	15	30	95	40	19	18	64	1/2”	M14×P1.5	170	120	270	220	18	25	65	244	15
Ø180	214	172	50	85	60	M45×P1.5	20	40	25	125	50	25	25	80	3/4”	M18×P1.5	220	140	320	270	22	25	100	310	10
Ø200	225	182	50	110	60	M45×P1.5	20	40	25	125	50	25	25	80	3/4”	M18×P1.5	225	150	335	280	24	25	100	310	10
Ø250	275	225	60	120	70	M56×P2	25	50	30	150	50	30	30	80	3/4”	M22×P1.5	275	180	420	355	29	30	120	335	30
Ø300	330	270	70	120	80	M64×P2	30	60	30	170	55	30	30	80	1”	M30×P1.5	330	212	475	400	33	30	140	365	30

Rear Flange Mounting Type
(CSFB Type)後法蘭型

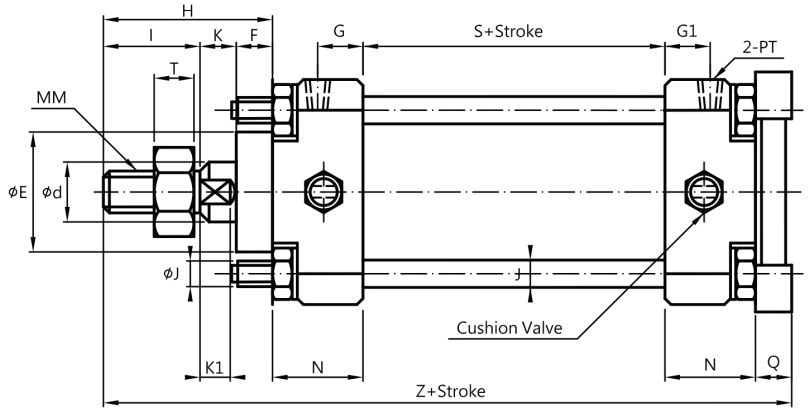

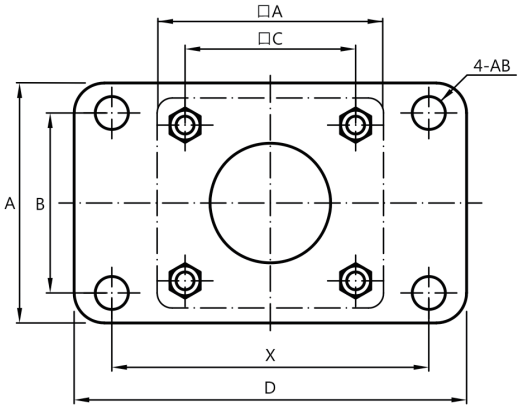

缸徑 Bore dia.	本體相關尺寸 Main body size																按裝相關尺寸 Mounting dimension								
	□A	□C	Ød	ØE	I	MM	K1	K	F	H	N	G	G1	S	PT	ØJ	A	B	D	X	ØAB	Q	Z	T	
Ø40	53.5	38	16	35	24	M14×P1.5	10	12	20	56	30	12	12	33	1/4”	M6×P1.25	62	42	100	80	9	20	169	10	
Ø50	66	47.5	20	40	32	M16×P1.5	10	10	12	54	26	12	12	45	1/4”	M8×1.25	68	50	110	90	9	12	163	13	
Ø63	75	56.5	20	40	32	M16×P1.5	10	10	12	54	30	15	15	45	1/4”	M8×P1.5	80	60	130	105	11	12	171	13	
Ø80	95	70	25	50	40	M22×P1.5	12	13	12	65	37	15	15	50	3/8”	M10×P1.5	98	75	160	130	13.5	12	201	10	
Ø100	113	84	30	52	40	M26×P1.5	12	12	15	67	37	15	15	50	3/8”	M10×P1.5	114	92	180	150	13.5	15	206	13	
Ø125	140	115	35	60	40	M30×P1.5	15	17	20	77	40	18	15	64	1/2”	M14×P1.5	148	117	220	185	18	20	241	15	
Ø150	171	133	35	60	50	M30×P1.5	15	15	30	95	40	19	18	64	1/2”	M14×P1.5	170	120	270	220	18	25	264	15	
Ø180	214	172	50	85	60	M45×P1.5	20	40	25	125	50	25	25	80	3/4”	M18×P1.5	220	140	320	270	22	25	330	10	
Ø200	225	182	50	110	60	M45×P1.5	20	40	25	125	50	25	25	80	3/4”	M18×P1.5	225	150	335	280	24	25	330	10	
Ø250	275	225	60	120	70	M56×P2	25	50	30	150	50	30	30	80	3/4”	M22×P1.5	275	180	420	355	29	30	360	30	
Ø300	330	270	70	120	80	M64×P2	30	60	30	170	55	30	30	80	1”	M30×P1.5	330	212	475	400	33	30	390	30	

Single Clevis Type (CSCA Type)單耳型

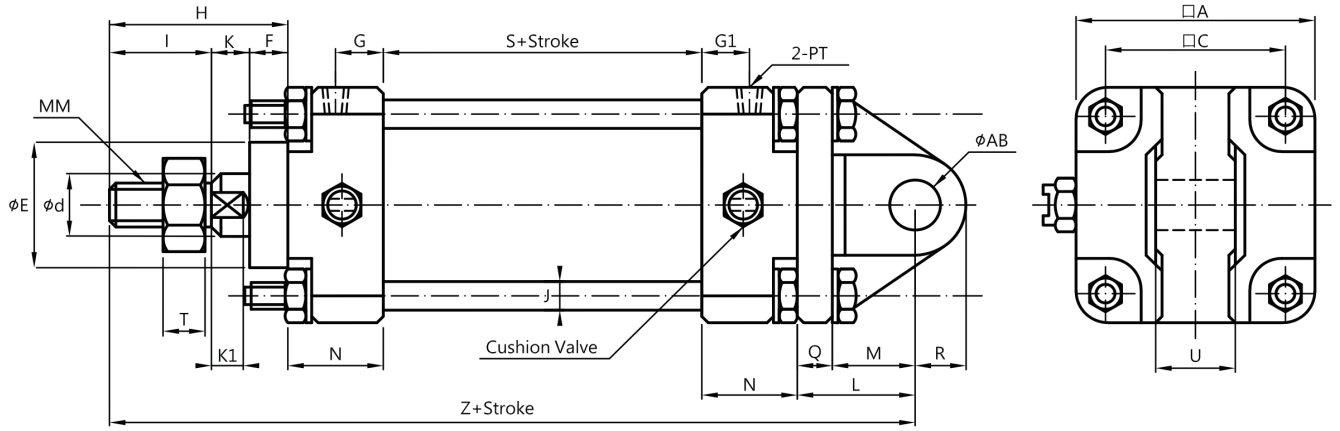

缸徑 Bore dia.	本體相關尺寸 Main body size																按裝相關尺寸 Mounting dimension							
	□A	□C	□d	ØE	I	MM	K1	K	F	H	N	G	G1	S	PT	ØJ	L	R	Q	M	ØAB	U	Z	T
Ø40	53.5	38	16	35	24	M14×P1.5	10	12	20	56	30	12	12	33	1/4”	M6×P1.25	36	12	20	16	12 H10	$15^{-0.1}_{-0.3}$	185	10
Ø50	66	47.5	20	40	32	M16×P1.5	10	10	12	54	26	12	12	45	1/4”	M8×P1.25	35	12	12	23	12 H10	$18^{-0.1}_{-0.3}$	186	13
Ø63	75	56.5	20	40	32	M16×P1.5	10	10	12	54	30	15	15	45	1/4”	M8×P1.5	38	16	12	26	16 H10	$25^{-0.1}_{-0.3}$	197	13
Ø80	95	70	25	50	40	M22×P1.5	12	13	12	65	37	15	15	50	3/8”	M10×P1.5	49	20	12	37	20 H10	$30^{-0.1}_{-0.3}$	238	10
Ø100	113	84	30	52	40	M26×P1.5	12	12	15	67	37	15	15	50	3/8”	M10×P1.5	57	25	15	42	25 H10	$35^{-0.1}_{-0.3}$	248	13
Ø125	140	115	35	60	40	M30×P1.5	15	17	20	77	40	18	15	64	1/2”	M14×P1.5	63	25	20	43	25 H10	$35^{-0.1}_{-0.4}$	284	15
Ø150	171	133	35	60	50	M30×P1.5	15	15	30	95	40	19	18	64	1/2”	M14×P1.5	80	30	25	55	30 H10	$40^{-0.1}_{-0.4}$	319	15
Ø180	214	172	50	85	60	M45×P1.5	20	40	25	125	50	25	25	80	3/4”	M18×P1.5	87	40	25	62	40 H10	$50^{-0.1}_{-0.4}$	392	10
Ø200	225	182	50	110	60	M45×P1.5	20	40	25	125	50	25	25	80	3/4”	M18×P1.5	87	40	25	62	40 H10	$50^{-0.1}_{-0.4}$	392	10
Ø250	275	225	60	120	70	M56×P2	25	50	30	150	50	30	30	80	3/4”	M22×P1.5	105	50	30	75	50 H10	$60^{-0.1}_{-0.3}$	435	30
Ø300	330	270	70	120	80	M64×P2	30	60	30	170	55	30	30	80	1”	M30×P1.5	120	70	30	90	63 H10	$75^{-0.1}_{-0.3}$	480	30

Doubie Clevie Type (CSCB Type)雙耳型

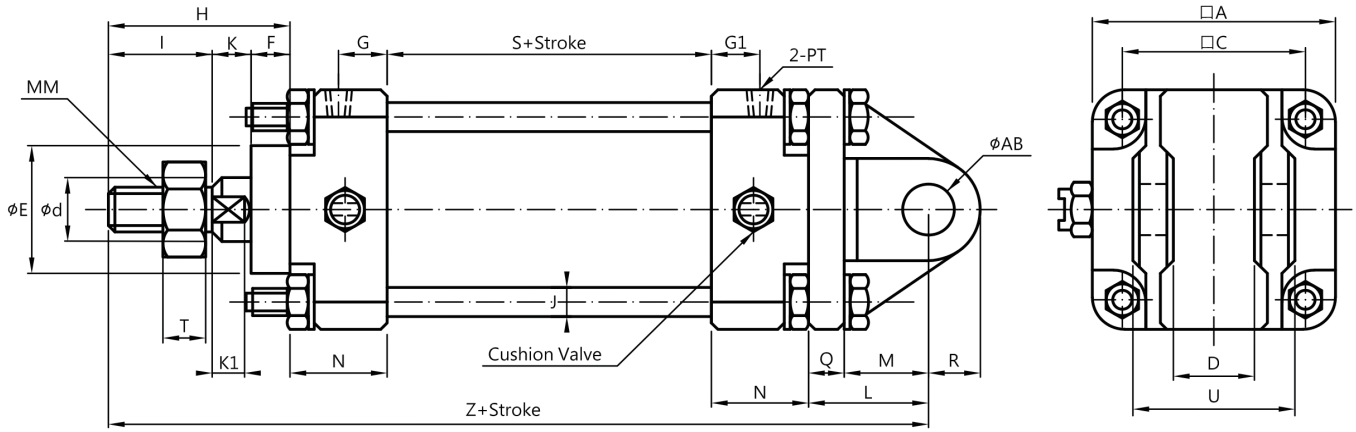

缸徑 Bore dia.	本體相關尺寸 Main body size																按裝相關尺寸 Mounting dimension								
	□A	□C	□d	ØE	I	MM	K1	K	F	H	N	G	G1	S	PT	ØJ	L	R	Q	M	ØAB	D	U	Z	T
Ø40	53.5	38	16	35	24	M14×P1.5	10	12	20	56	30	12	12	33	1/4”	M6×P1.25	36	12	20	16	12 H10	$15^{-0.1}_{-0.3}$	30	185	10
Ø50	66	47.5	20	40	32	M16×P1.5	10	10	12	54	26	12	12	45	1/4”	M8×P1.25	35	12	12	23	12 H10	$18^{-0.1}_{-0.3}$	35.5	186	13
Ø63	75	56.5	20	40	32	M16×P1.5	10	10	12	54	30	15	15	45	1/4”	M8×P1.5	38	16	12	26	16 H10	$25^{-0.1}_{-0.3}$	50	197	13
Ø80	95	70	25	50	40	M22×P1.5	12	13	12	65	37	15	15	50	3/8”	M10×P1.5	49	20	12	37	20 H10	$30^{-0.1}_{-0.3}$	63	238	10
Ø100	113	84	30	52	40	M26×P1.5	12	12	15	67	37	15	15	50	3/8”	M10×P1.5	57	25	15	42	25 H10	$35^{-0.1}_{-0.3}$	71	248	13
Ø125	140	115	35	60	40	M30×P1.5	15	17	20	77	40	18	15	64	1/2”	M14×P1.5	63	25	20	43	25 H10	$35^{-0.1}_{-0.3}$	64	284	15
Ø150	171	133	35	60	50	M30×P1.5	15	15	30	95	40	19	18	64	1/2”	M14×P1.5	80	30	25	55	30 H10	$40^{-0.1}_{-0.3}$	80	319	15
Ø180	214	172	50	85	60	M45×P1.5	20	40	25	125	50	25	25	80	3/4”	M18×P1.5	87	40	25	62	40 H10	$50^{-0.1}_{-0.3}$	100	392	10
Ø200	225	182	50	110	60	M45×P1.5	20	40	25	125	50	25	25	80	3/4”	M18×P1.5	87	40	25	62	40 H10	$50^{-0.1}_{-0.3}$	100	392	10
Ø250	275	225	60	120	70	M56×P2	25	50	30	150	50	30	30	80	3/4”	M22×P1.5	105	50	30	75	50 H10	$60^{-0.1}_{-0.3}$	126	435	30
Ø300	330	270	70	120	80	M64×P2	30	60	30	170	55	30	30	80	1”	M30×P1.5	120	70	30	90	63 H10	$75^{-0.1}_{-0.3}$	160	480	30

Trumnion Type
(CSTC)砲耳型

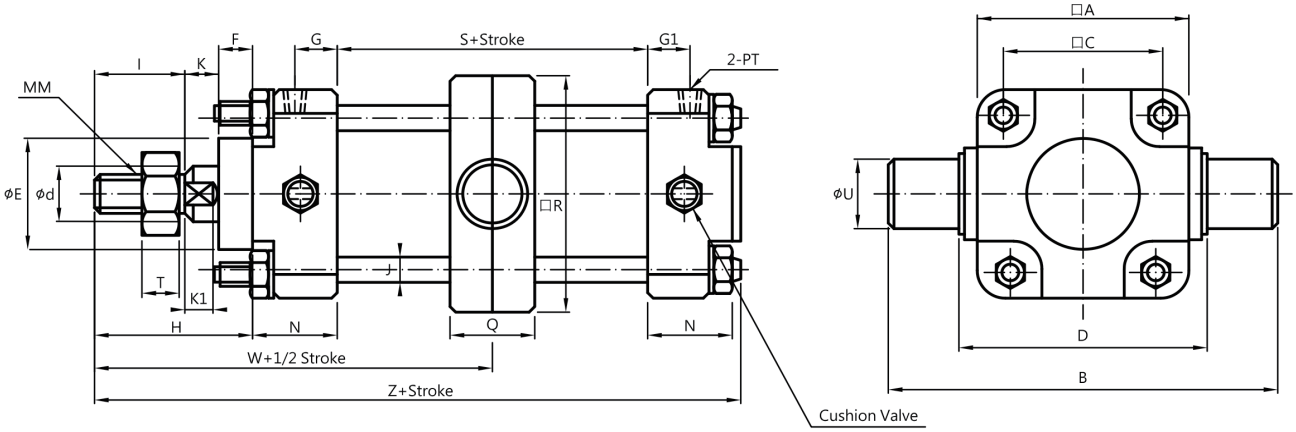

缸徑 Bore dia.	本體相關尺寸 Main body size																安裝相關尺寸 Mounting dimension								
	□A	□C	Ød	ØE	I	MM	K1	K	F	H	N	G	G1	S	PT	ØJ	B	D	ØU		Q	□R	W	Z	T
Ø40	53.5	38	16	35	24	M14×P1.5	10	12	20	56	30	12	12	33	1/4”	M6×P1.25	113	63	25	d9	30	60	102.5	149	10
Ø50	66	47.5	20	40	32	M16×P1.5	10	10	12	54	26	12	12	45	1/4”	M8×P1.25	126	76	25	d9	30	73	102.5	151	13
Ø63	75	56.5	20	40	32	M16×P1.5	10	10	12	54	30	15	15	45	1/4”	M8×P1.5	138	88	25	d9	30	85	106.5	159	13
Ø80	95	70	25	50	40	M22×P1.5	12	13	12	65	37	15	15	50	3/8”	M10×P1.5	164	114	25	d9	30	111	127	189	10
Ø100	113	84	30	52	40	M26×P1.5	12	12	15	67	37	15	15	50	3/8”	M10×P1.5	182	132	25	d9	30	130	129	191	13
Ø125	140	115	35	60	40	M30×P1.5	15	17	20	77	40	18	15	64	1/2”	M14×P1.5	220	160	30	e8	50	158	149	221	15
Ø150	171	133	35	60	50	M30×P1.5	15	15	30	95	40	19	18	64	1/2”	M14×P1.5	274	194	40	e8	60	190	167	239	15
Ø180	214	172	50	85	60	M45×P1.5	20	40	25	125	50	25	25	80	3/4”	M18×P1.5	314	260	45	e8	65	256	215	305	10
Ø200	225	182	50	110	60	M45×P1.5	20	40	25	125	50	25	25	80	3/4”	M18×P1.5	350	260	45	e8	70	256	215	305	10
Ø250	275	225	60	120	70	M56×P2	25	50	30	150	50	30	30	80	3/4”	M22×P1.5	420	320	56	e8	80	315	240	330	30
Ø300	330	270	70	120	80	M64×P2	30	60	30	170	55	30	30	80	1”	M30×P1.5	500	370	65	e8	85	365	265	360	30

桿端接頭
Rod End Adapter

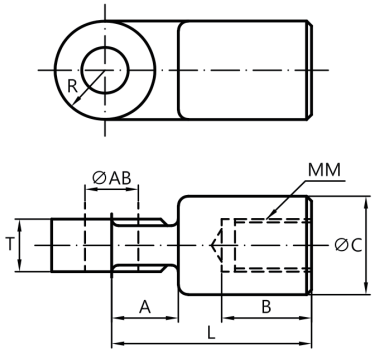

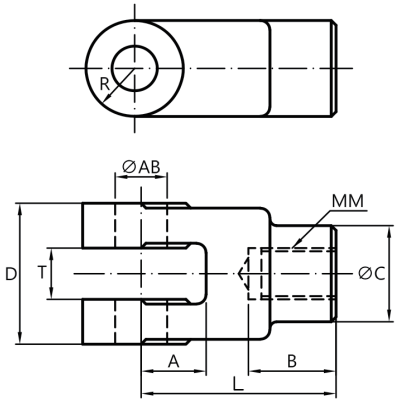

I型接頭 I-Adapter(unit:mm)

缸徑 Bore dia.	安裝相關尺寸 Mounting dimension							
	A	B	ØC	L	T	ØAB	MM	R
Ø40	20	22	28	55	16 $^{-0.1}_{-0.3}$	12 H10	M14×P1.5	14
Ø50	20	27	30	60	16 $^{-0.1}_{-0.3}$	12 H10	M16×P1.5	15
Ø63	20	27	30	60	16 $^{-0.1}_{-0.3}$	16 H10	M16×P1.5	16
Ø80	26	37	40	71	28 $^{-0.1}_{-0.3}$	20 H10	M20×P1.5	20
Ø100	28	37	44	83	30 $^{-0.1}_{-0.3}$	20 H10	M26×P1.5	22
Ø125	35	60	60	100	32 $^{-0.1}_{-0.3}$	25 H10	M30×P1.5	30
Ø150	45	60	70	110	40 $^{-0.1}_{-0.3}$	30 H10	M30×P1.5	37
Ø180	50	70	90	125	50 $^{-0.1}_{-0.3}$	40 H10	M45×P1.5	45
Ø200	50	70	90	125	50 $^{-0.1}_{-0.3}$	40 H10	M45×P1.5	45
Ø250	63	80	110	160	63 $^{-0.1}_{-0.3}$	50 H10	M56×P2	55
Ø300	75	90	140	175	80 $^{-0.1}_{-0.3}$	63 H10	M64×P2	70

Y型接頭 Y-Adapter(unit:mm)

缸徑 Bore dia.	安裝相關尺寸 Mounting dimension								
	A	B	ØC	L	T	D	ØAB	MM	R
Ø40	20	22	28	55	16 $^{+0.3}_{+0.3}$	44	12 H10	M14×P1.5	14
Ø50	20	27	30	60	16 $^{+0.3}_{+0.1}$	44	12 H10	M16×P1.5	15
Ø63	20	27	30	60	16 $^{+0.3}_{+0.1}$	44	16 H10	M16×P1.5	15
Ø80	26	37	40	71	28 $^{+0.3}_{+0.1}$	60	20 H10	M20×P1.5	20
Ø100	28	37	44	83	30 $^{+0.3}_{+0.1}$	66	20 H10	M26×P1.5	22
Ø125	35	60	60	100	32 $^{+0.3}_{+0.1}$	64	25 H10	M30×P1.5	30
Ø150	45	60	70	110	40 $^{+0.3}_{+0.1}$	80	30 H10	M30×P1.5	37
Ø180	50	70	90	125	50 $^{+0.3}_{+0.1}$	100	40 H10	M45×P1.5	45
Ø200	50	70	90	125	50 $^{+0.3}_{+0.1}$	100	40 H10	M45×P1.5	45
Ø250	63	80	110	160	63 $^{+0.3}_{+0.1}$	126	50 H10	M56×P2	55
Ø300	75	90	140	175	80 $^{+0.3}_{+0.1}$	160	70 H10	M64×P2	70

常用計算式
General Calculating Formula

$F = P \times A$ — F:理論出力/Theoretical Output(kg/cm²) — P:動作壓力/Action Pressure(kg/cm²)

$Q = A \times V$ — Q:幫浦流量/Pump Delivery(l/min) — A:受壓面積/Under Press Area(cm²)

$HP = \frac{P \times Q}{450}$ — V:活動速度/Piston Speed(cm/min) — D:缸管內徑Dia. of Cylinder Bore(mm)

HP:馬達馬力/Motor Power(HP) — n:油壓泵效率/Eff. of Hyd.Pump

$t = \frac{P \times D}{2000S}$ — t:缸管內厚/Cylinder Bore Thickness(mm) — δ:抗張強度/Tension-Resistant Strength(kg/cm²)

S:/5

型式表示法
The Illustration For Order System

安裝 Mounting Styles — 緩衝 Cushion — 內徑 Bore Diameter × 行程 Stroke — 桿徑 Rod series

- 緩衝 Cushion:
  - N: No Cushion
  - B: Both End Cushion
  - H: Head End Cushion
  - R: Rod End Cushion
- 桿徑 Rod series:
  - B: Heavy Duty
  - C: Standard Duty
- 安裝 Mounting Styles:
  - FA, FB, LA, LB, CA, TC. 等六種標準型式安裝

※緩衝方式，標準型為無緩衝，但如油壓缸速度在6-10m/min以上時，請考慮附加緩衝裝置，請於訂購時註明。

※當油壓缸速度要求快速或特慢速時，請特別註明，以便製做時配合之。

※The cushioning style which standard is no cushion but the hyd. cylinder action speed is at 6-10m/min and over. That must considered install cushion, installation please specified at order.

※During the hyd. cylinder action speed must implied rapid speed or much slow speed and then, specified at order and accompanied with our manufactured.

氣缸理論出力參照表 Theoretical Output Refer Data

缸徑 Bore dia.	活塞桿 Rod size	使用壓力 Operating Pressure kgf/cm²																	
		20kg		30kg		50kg		70kg		100kg		120kg		140kg		160kg		210kg	
		in	out	in	out	in	out	in	out	in	out	in	out	in	out	in	out	in	out
40	20	188	252	282	378	470	630	658	882	940	1260	1128	1512	1316	1764	1504	2016	1974	2646
50	25	294	392	441	588	435	980	1029	1372	1470	1960	1764	2352	2058	2744	2352	3136	3087	4116
63	30	482	624	723	936	1205	1560	1687	2184	2410	3120	2890	3744	3374	4368	3856	4992	5061	6552
80	40	754	1006	1131	1509	1885	2515	2633	3521	3770	5030	4524	6030	5278	7042	6032	8248	7917	10563
100	50	1178	1570	1767	2356	2946	3927	4124	5498	5891	7854	7069	9425	8247	1000	9425	12566	12370	16493
125	60	1889	2454	2833	3682	4722	6136	6611	8590	9444	12272	11333	14736	13222	17180	15110	19635	19830	25770
150	70	2764	3534	4147	5301	6911	8835	9675	12369	13822	17670	16586	21204	19351	24738	22115	28272	29026	37107
180	80	4084	5089	6126	7634	10210	12724	14295	17813	20421	25447	24505	30536	28589	35626	32674	40715	42884	53439
200	100	4712	6283	7067	9425	11781	15708	16493	21991	23562	31416	28274	37699	32987	43982	37699	50266	49480	65974
250	140	6739	9018	10108	14726	16847	22544	23586	31562	33694	49088	40433	58906	47172	68723	53910	72141	70757	94685
300	180	9048	14137	13572	21206	22620	35343	31667	49480	45239	70686	54187	84823	63335	98960	72382	113097	95002	118440

例：實際出力計算例

1.若使用壓力為50kgf/cm²，而油壓缸內徑為φ80時，查理論出力參照表，得油壓缸推力為2515kgf/cm²。

2.但實際出力則為2515×0.8＝2012kgf/cm²

For Example:The calculating for practical output

1.If the operating pressure is 50kgf/cm² and the bore dia. of hyd. cylinder is φ80mm we can from the refering data and achieve the output of hyd. cylinder is 2515 kgf/cm².

2.But the practical output which is 2515×0.8＝2012 kgf/cm²

OJ Series

內部構造與零件名稱

Internal structure and part name

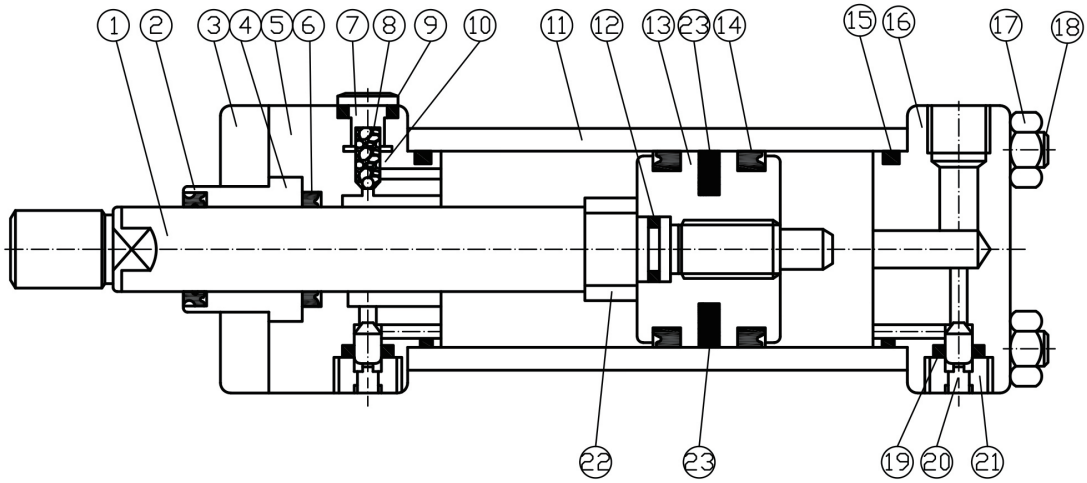

項目/NO.	名稱/Description	材質/Material	數量/Q.ty	項目/NO.	名稱/Description	材質/Material	數量/Q.ty
1	氣缸軸桿/shaft rod	S45C	1	13	活塞/Piston	KCD、BC6	1
2	防塵油封/Dust-proof oil sealer	合成樹脂/Synthetic resin	1	14	活塞油封/Oil seal	合成樹脂/Synthetic resin	2
3	壓板/follower plate	SS41	1	15	O型環/O ring	NBR	2
4	軸套/Sleeve	炮銅/BC6	1	16	後蓋/Pear cover	SS41	1
5	前蓋/Front cover	SS41	1	17	螺帽/Scrrew nut	S45C	8
6	軸桿油封/Oil seal	合成樹脂/Synthetic resin	1	18	螺栓/Screw bolt	S45C	4
7	逆止閥油封/Plugs	S45C	2	19	O型環/O ring	NBR	2
8	彈簧/Spring	SUB	2	20	緩衝調整螺絲/Adjusting screw	SCM3	2
9	O型環/O ring	NBR	2	21	緩衝閥栓塞/Plugs for cushioni valve	S45C	2
10	鋼珠/Steel ball	軸承鋼/Bearing steel	2	22	緩衝環/Ushioning ring	S45C	1
11	氣缸管/Cyl.tube	STKM13C	1	23	磁石/MAGNET	橡膠(ME)	1
12	O型環/O ring	NBR	1				

名稱 Name / 數量 Q.ty / 內徑 Dia	2防塵油封/Dust-proof sealer		6軸桿油封/Shaft sealer		9 O型環 O ring	12 O型環 O ring	14 活塞油封 Piston/Seal	15 O型環 O ring	19 O型環 O ring
	C桿徑/Shafcdia	B桿徑/Shafcdia	C桿徑/Shafcdia	B桿徑/Shafcdia					
	1	1	1	1	2	1	2	2	2
Ø40	DH-20	DH-25	UHS-20	UHS-25	P12	P16	UHP-40	G35	P8
Ø50	DH-25	DH-30	UHS-25	UHS-30	P12	P20	UHP-50	G45	P8
Ø63	DH-30	DH-35	UHS-30	UHS-35	P12	P20	UHP-63	G58	P8
Ø80	DH-35	DH-40	UHS-35	UHS-40	P12	P25	UHP-80	G75	P8
Ø100	DH-45	DH-50	UHS-45	UN-50	P12	G35	UHP-100	G95	P8
Ø125	DH-50	DH-60	UN-50	UN-60	P12	G40	UHP-125	G120	P8
Ø150	DH-60	DH-70	UN-60	UN-70	P16	G40	UHP-150	P140	P10
Ø180	DH-70	DH-80	UN-70	UN-80	P16	G70	UHP-180	G170	P10
Ø200	DH-80	DH-100	UN-80	UN-100	P16	G80	UHP-200	G190	P10
Ø224	DH-100	DH-110	UN-100	UN-110	P16	G100	UHP-224	G210	P10
Ø250	DH-110	DH-125	UN-110	UN-125	P16	G110	UHP-250	G240	P10

OJ SD Type I

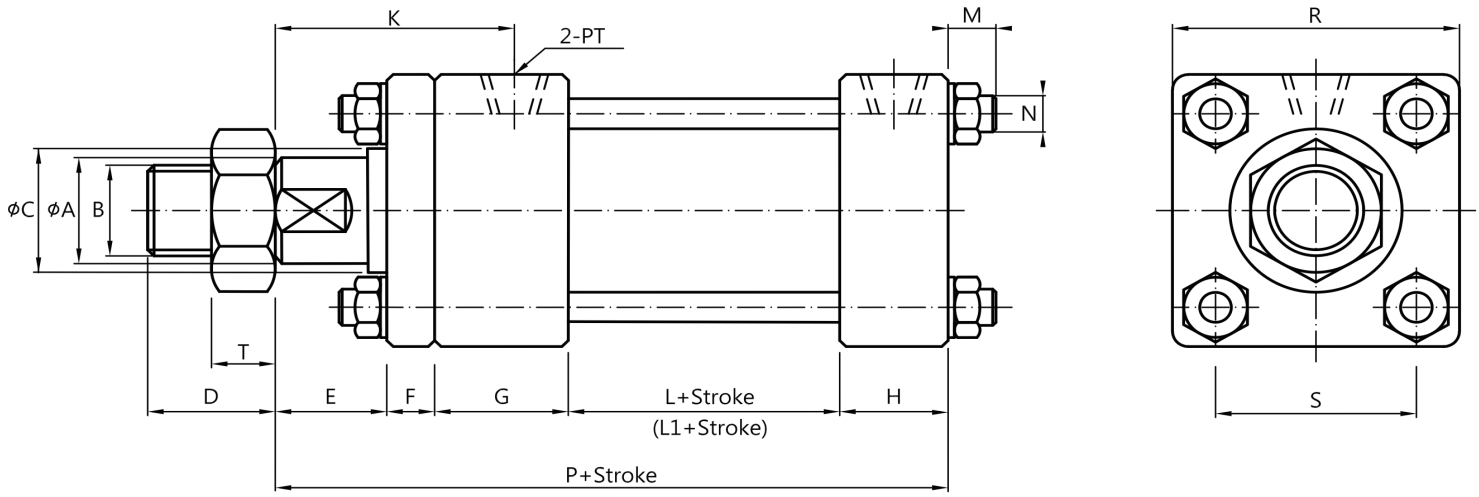

OJ SD Type II

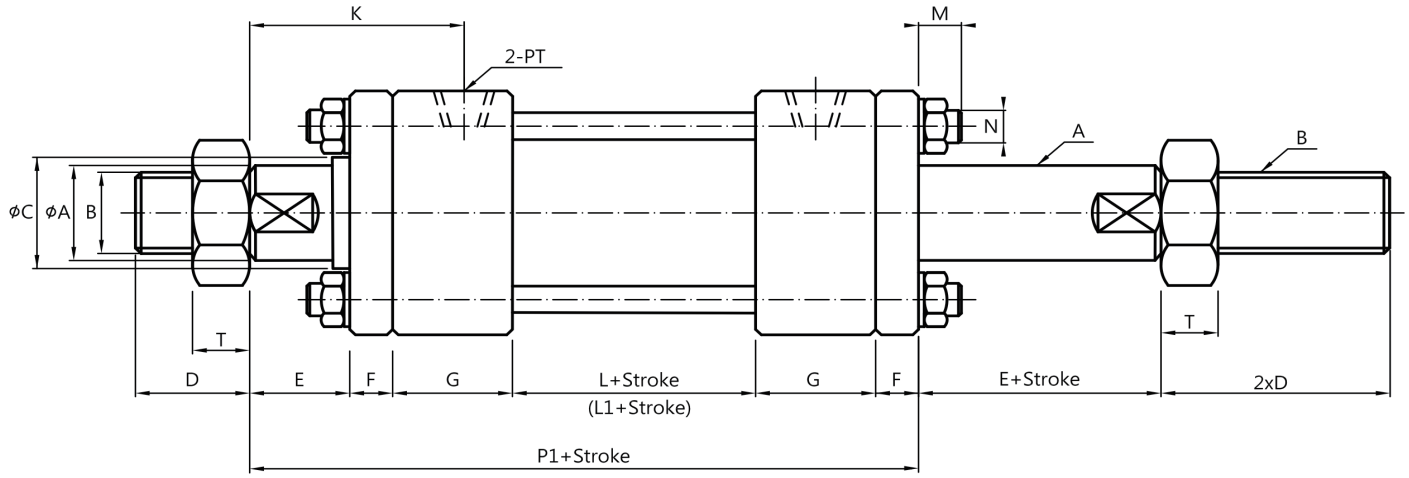

註記：L1感應式油壓缸基本長度

Note: Basic length of L1 induction hydraulic cylinder

缸徑 Bore dia.	活塞桿 Rod ser ies.	本體尺寸 Main body size & 按裝相關尺寸 Mountinging dimension																		
		ØA	B	ØC	D	E	F	G	H	K	L	L1	M	N	R	S	P	P1	T	PT
Ø40	C B	20 25	M18P1.5 M22P1.5	35 40	25 30	20	11	36	26	54	50	55	13	M10P1.5	65	45	143	164	15 17	1/4”
Ø50	C B	25 30	M22P1.5 M26P1.5	40 45	30 35	30	13	42	34	68	50	55	13	M10P1.5	75	52	169	190	17 18	3/8”
Ø63	C B	30 35	M26P1.5 M30P1.5	45 50	35 40	35	15	42	34	75	50	55	15	M12P1.75	90	63	176	199	18 20	3/8”
Ø80	C B	35 40	M30P1.5 M35P1.5	50 55	40 45	35	18	46	40	79	50	60	17	M16P1.5	110	80	189	213	20 20	1/2”
Ø100	C B	45 50	M40P1.5 M45P1.5	60 65	45 55	40	20	50	40	90	69	74	19	M18P1.5	135	98	219	249	20 20	1/2”
Ø125	C B	50 60	M45P1.5 M50P2.0	65 75	55 65	45	24	58	48	104	69	74	21	M22P1.5	136	122	244	278	20 20	3/4”
Ø150	C B	60 70	M50P2.0 M60P2.0	75 85	60 80	50	28	58	48	113	69	74	23	M24P1.5	195	148	253	291	20 20	3/4”
Ø180	C B	70 80	M60P2.0 M70P2.0	85 100	110 140	55	33	68	58	127	90	90	25	M30P1.5	235	182	305	347	20 20	1”
Ø200	C B	80 100	M70P2.0 M90P2.0	100 120	120 150	55	37	68	58	137	90	90	27	M32P2.0	262	200	308	355	20 20	1”
Ø224	C B	100 110	M90P2.0 M100P2.0	120 130	140 180	60	41	68	58	146	90	90	29	M32P2.0	292	225	317	365	20 20	1”
Ø250	C B	110 125	M100P2.0 M110P2.0	130 145	150 195	65	46	68	58	169	90	90	31	M38P2.0	325	250	327	383	20 20	1 1/4”

OJ FA Type I

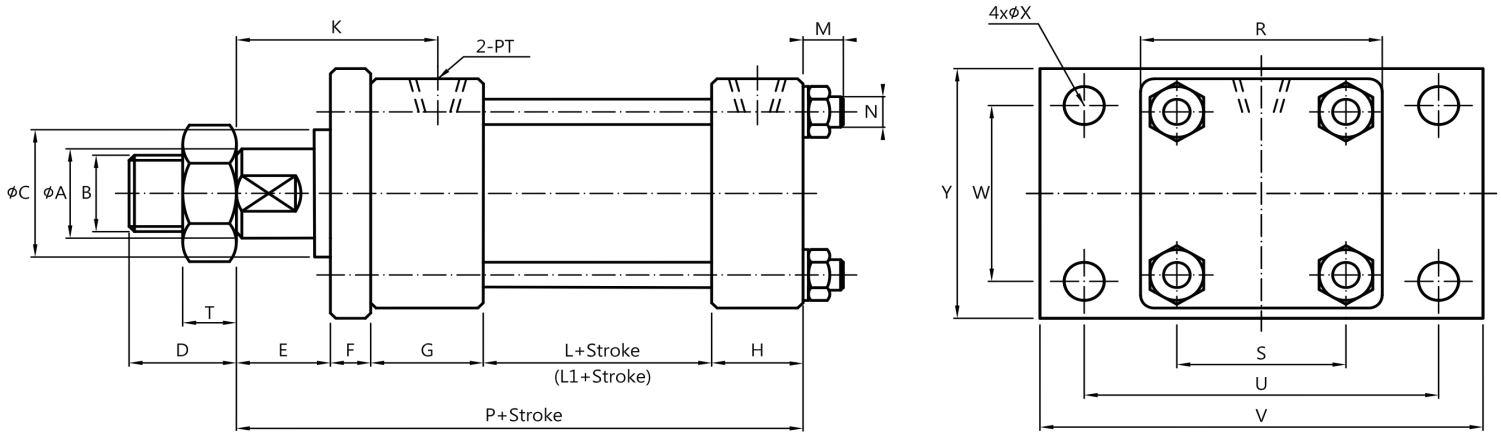

OJ FA Type II

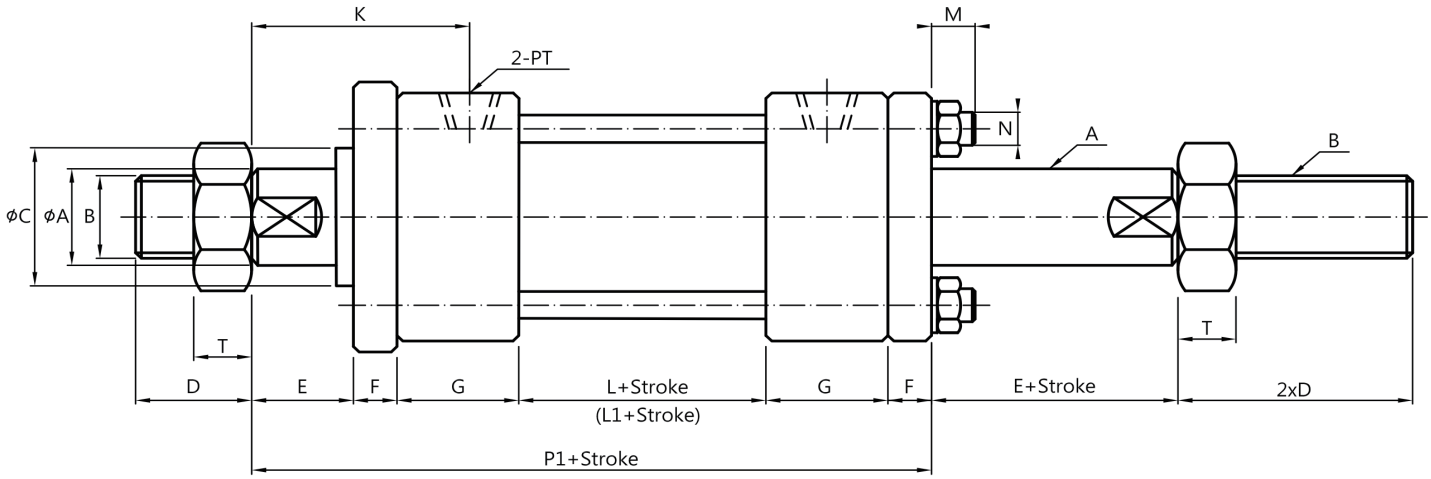

註記：L1感應式油壓缸基本長度

Note: Basic length of L1 induction hydraulic cylinder

缸徑 Bore dia.	活塞桿 Rod series.	本體尺寸 Main body size & 按裝相關尺寸 Mountinging dimension																							
		ØA	B	ØC	D	E	F	G	H	K	L	L1	M	N	P	P1	PT	R	S	U	V	W	ØX	Y	T
Ø40	C B	20 25	M18P1.5 M22P1.5	35 40	25 30	20	11	36	26	54	50	55	13	M10P1.5	143	164	1/4″	65	45	95	118	46	11	69	15 17
Ø50	C B	25 30	M22P1.5 M26P1.5	40 45	30 35	30	13	42	34	68	50	55	13	M10P1.5	169	190	3/8″	75	52	115	145	58	13	85	17 18
Ø63	C B	30 35	M26P1.5 M30P1.5	45 50	35 40	35	15	42	34	75	50	55	15	M12P1.75	176	199	3/8″	90	63	132	165	69	15	98	18 20
Ø80	C B	35 40	M30P1.5 M35P1.5	50 55	40 45	35	18	46	40	79	50	60	17	M16P1.5	189	213	1/2″	110	80	155	190	87	18	118	20 20
Ø100	C B	45 50	M40P1.5 M45P1.5	60 65	45 55	40	20	50	40	90	69	74	19	M18P1.5	219	249	1/2″	135	98	185	224	109	20	145	20 20
Ø125	C B	50 60	M45P1.5 M50P2.0	65 75	55 65	45	24	58	48	104	69	74	21	M22P1.5	244	278	3/4″	136	122	224	272	132	24	175	20 20
Ø150	C B	60 70	M50P2.0 M60P2.0	75 85	60 80	50	28	58	48	113	69	74	23	M24P1.5	253	291	3/4″	195	148	265	315	155	28	206	20 20
Ø180	C B	70 80	M60P2.0 M70P2.0	85 100	110 140	55	33	68	58	127	90	90	25	M30P1.5	305	347	1″	235	182	315	375	185	33	234	20 20
Ø200	C B	80 100	M70P2.0 M90P2.0	100 120	120 150	55	37	68	58	137	90	90	27	M32P2.0	308	355	1″	262	200	355	425	206	36	272	20 20
Ø224	C B	100 110	M90P2.0 M100P2.0	120 130	140 180	60	41	68	58	146	90	90	29	M32P2.0	317	368	1″	292	225	395	475	230	42	310	20 20
Ø250	C B	110 125	M100P2.0 M110P2.0	130 145	150 195	65	46	68	58	169	90	90	31	M38P2.0	327	383	1 1/4″	325	250	425	515	250	45	335	20 20

OJ FB Type I

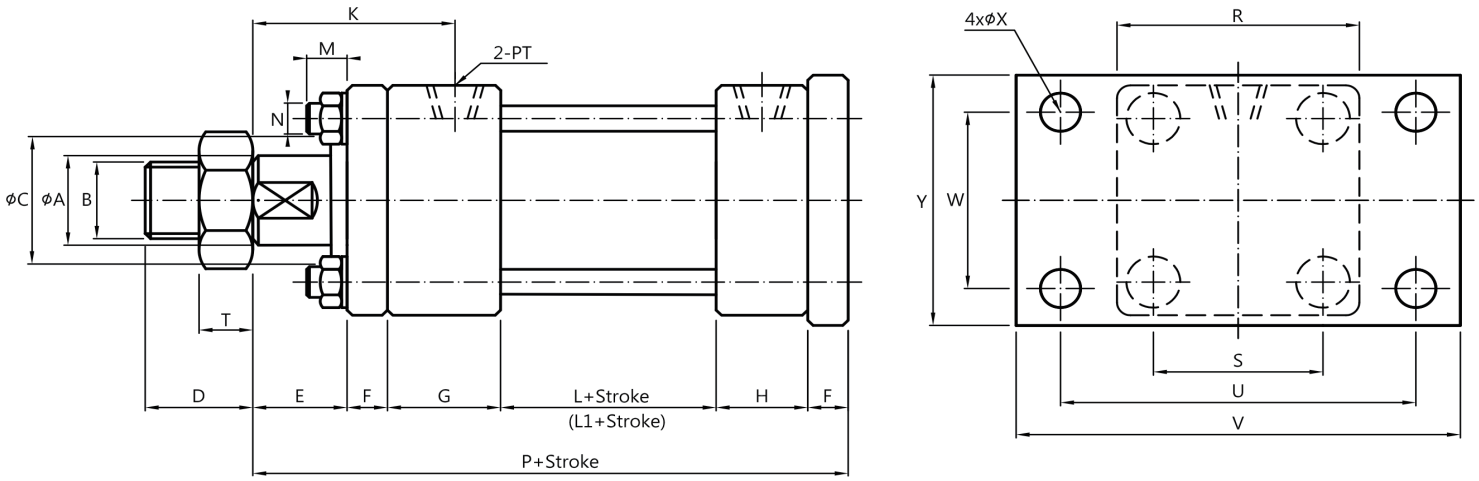

OJ FB Type II

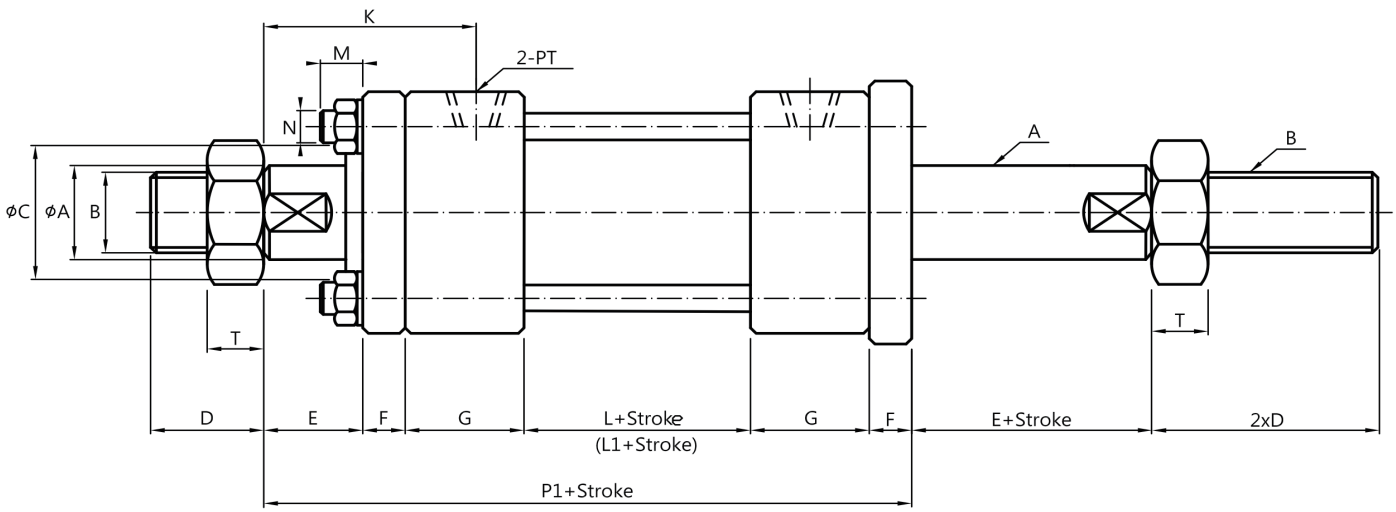

註記：L1感應式油壓缸基本長度

Note: Basic length of L1 induction hydraulic cylinder

缸徑 Bore dia.	活塞桿 Rod ser ies.	本體尺寸 Main body size & 按裝相關尺寸 Mountinging dimension & 感應式油壓缸																							
		ØA	B	ØC	D	E	F	G	H	K	L	L1	M	N	P	P1	PT	R	S	U	V	W	ØX	Y	T
Ø40	C B	20 25	M18P1.5 M22P1.5	35 40	25 30	20	11	36	26	54	50	55	13	M10P1.5	154	164	1/4”	65	45	95	118	46	11	69	15 17
Ø50	C B	25 30	M22P1.5 M26P1.5	40 45	30 35	30	13	42	34	70	50	55	13	M10P1.5	182	190	3/8”	75	52	115	145	58	13	85	17 18
Ø63	C B	30 35	M26P1.5 M30P1.5	45 50	35 40	35	15	42	34	77	50	55	15	M12P1.75	191	199	3/8”	90	63	132	165	69	15	98	18 20
Ø80	C B	35 40	M30P1.5 M35P1.5	50 55	40 45	35	18	46	40	79	50	60	17	M16P1.5	207	213	1/2”	110	80	155	190	87	18	118	20 20
Ø100	C B	45 50	M40P1.5 M45P1.5	60 65	45 55	40	20	50	40	90	69	74	19	M18P1.5	239	249	1/2”	135	98	185	224	109	20	145	20 20
Ø125	C B	50 60	M45P1.5 M50P2.0	65 75	55 65	45	24	58	48	104	69	74	21	M22P1.5	268	278	3/4”	165	122	224	272	132	24	175	20 20
Ø150	C B	60 70	M50P2.0 M60P2.0	75 85	60 80	50	28	58	48	113	69	74	23	M24P1.5	281	291	3/4”	195	148	265	315	155	28	206	20 20
Ø180	C B	70 80	M60P2.0 M70P2.0	85 100	110 140	55	33	68	58	127	90	90	25	M30P1.5	337	347	1”	235	182	315	375	185	33	243	20 20
Ø200	C B	80 100	M70P2.0 M90P2.0	100 120	120 150	55	37	68	58	137	90	90	27	M32P2.0	345	355	1”	262	200	355	425	206	36	272	20 20
Ø224	C B	100 110	M90P2.0 M100P2.0	120 130	140 180	60	41	68	58	146	90	90	29	M32P2.0	358	368	1”	292	225	395	475	230	42	310	20 20
Ø250	C B	110 125	M100P2.0 M110P2.0	130 145	150 195	65	46	68	58	169	90	90	31	M38P2.0	373	383	1 1/4”	325	250	425	515	250	45	335	20 20

OJ LA Type I

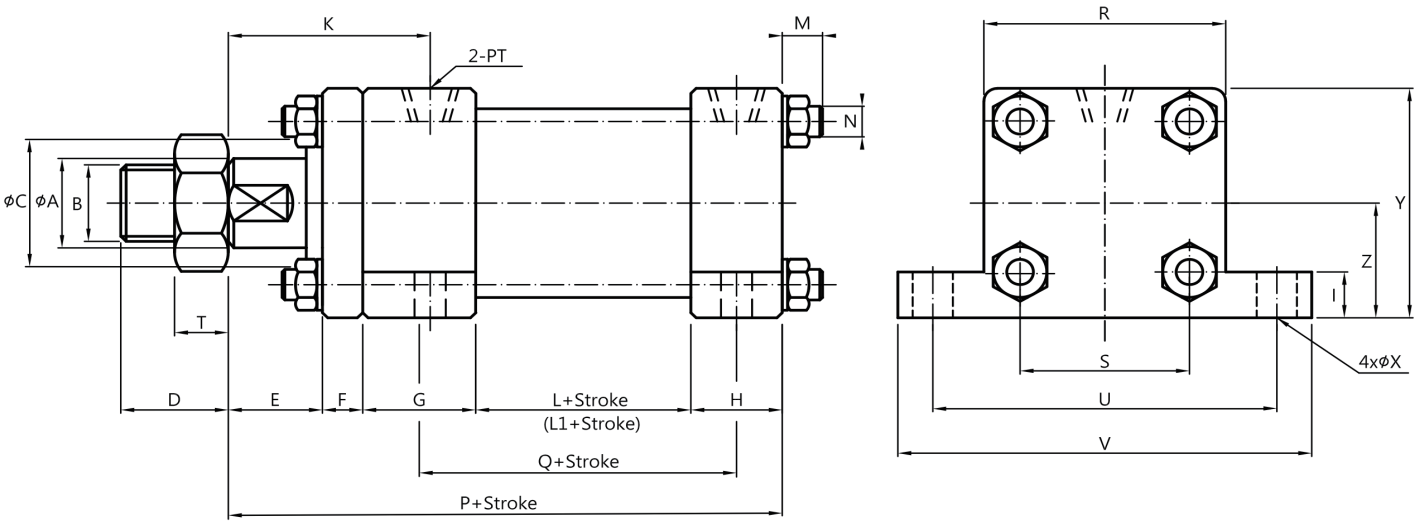

OJ LA Type II

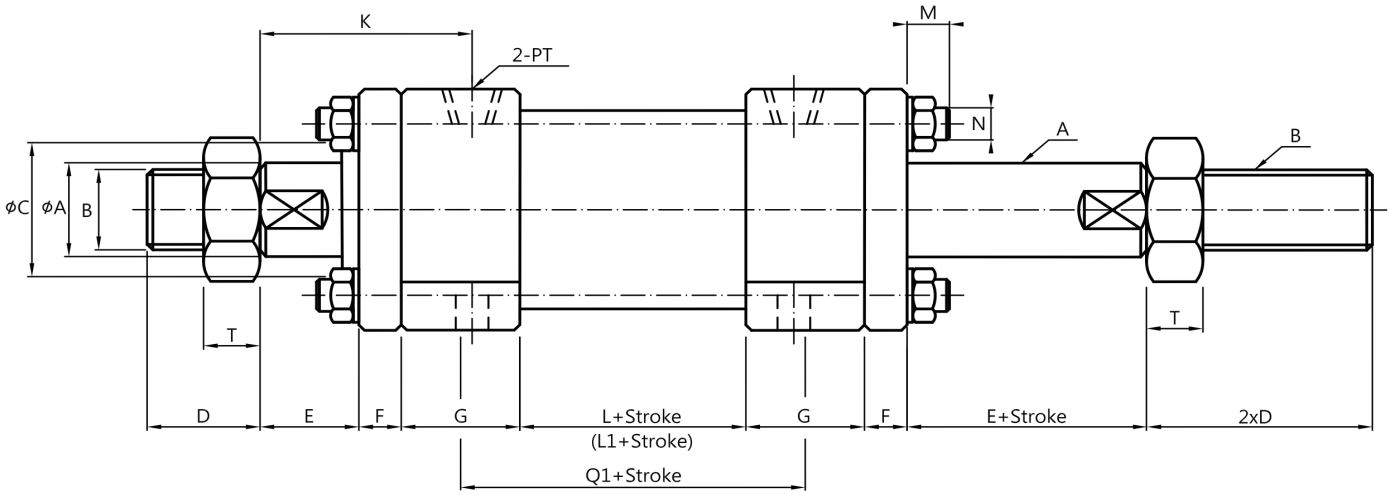

註記：L1感應式油壓缸基本長度

Note: Basic length of L1 induction hydraulic cylinder

缸徑 Bore dia.	活塞桿 Rod series.	本體尺寸 Main body size & 按裝相關尺寸 Mountinging dimension																									
		ØA	B	ØC	D	E	F	G	H	K	L	L1	M	N	P	PT	Q	Q1	R	S	I	U	V	ØX	Y	Z	T
Ø40	C B	20 25	M18P1.5 M22P1.5	35 40	25 30	20	11	36	26	54	50	55	13	M10P1.5	143	1/4”	81	86	65	45	13	90	112	11	65	32.5	15 17
Ø50	C B	25 30	M22P1.5 M26P1.5	40 45	30 35	30	13	42	34	70	50	55	13	M10P1.5	169	3/8”	88	92	75	52	15	109	132	13	75	37.5	17 18
Ø63	C B	30 35	M26P1.5 M30P1.5	45 50	35 40	35	15	42	34	77	50	55	15	M12P1.75	176	3/8”	88	92	90	63	18	128	154	15	90	45	18 20
Ø80	C B	35 40	M30P1.5 M35P1.5	50 55	40 45	35	18	46	40	79	50	60	17	M16P1.5	189	1/2”	93	96	110	80	20	152	184	18	110	55	20 20
Ø100	C B	45 50	M40P1.5 M45P1.5	60 65	45 55	40	20	50	40	90	69	74	19	M18P1.5	219	1/2”	114	119	135	98	24	178	210	20	135	67.5	20 20
Ø125	C B	50 60	M45P1.5 M50P2.0	65 75	55 65	45	24	58	48	104	69	74	21	M22P1.5	244	3/4”	122	127	165	122	28	211	250	24	165	82.5	20 20
Ø150	C B	60 70	M50P2.0 M60P2.0	75 85	60 80	50	28	58	48	113	69	74	23	M24P1.5	253	3/4”	122	127	195	148	32	255	300	28	195	97.5	20 20
Ø180	C B	70 80	M60P2.0 M70P2.0	85 100	110 140	55	33	68	58	127	90	90	25	M30P1.5	294	1”	153	158	235	182	37	300	354	33	235	117.5	20 20
Ø200	C B	80 100	M70P2.0 M90P2.0	100 120	120 150	55	37	68	58	137	90	90	27	M32P2.0	298	1”	153	158	262	200	42	326	385	33	262	131	20 20
Ø224	C B	100 110	M90P2.0 M100P2.0	120 130	140 180	60	41	68	58	146	90	90	29	M32P2.0	307	1”	153	158	292	225	47	360	420	36	292	146	20 20
Ø250	C B	110 125	M100P2.0 M110P2.0	130 145	150 195	65	46	68	58	169	90	90	31	M38P2.0	327	1 1/4”	153	158	325	250	52	405	476	42	325	162.5	20 20

OJ LB Type I

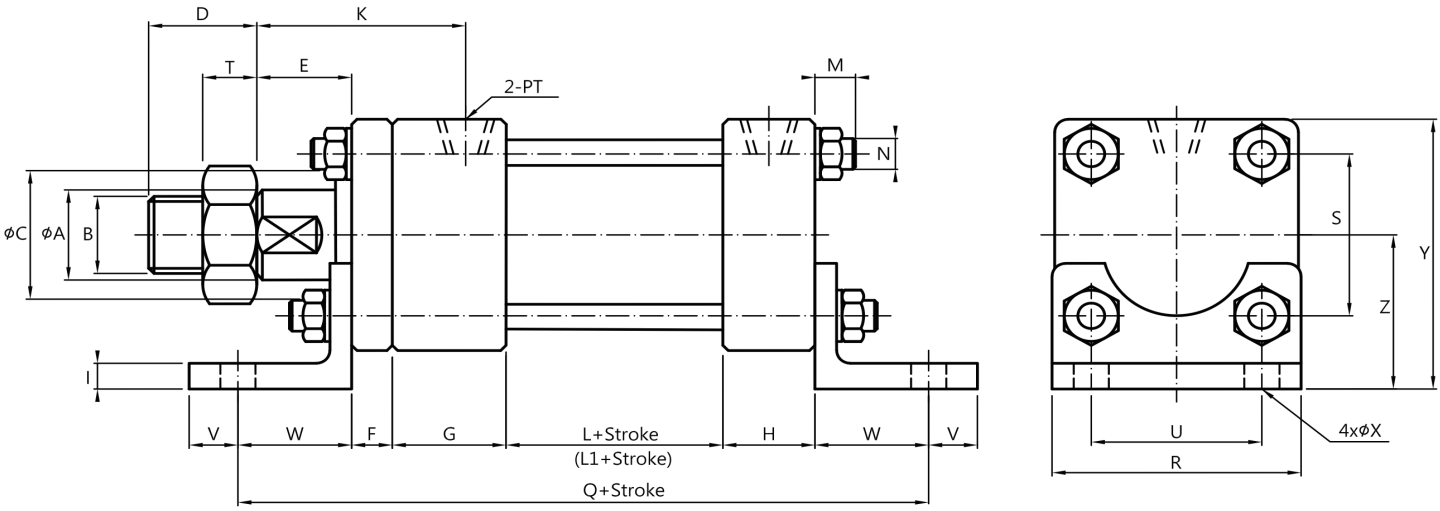

OJ LB Type II

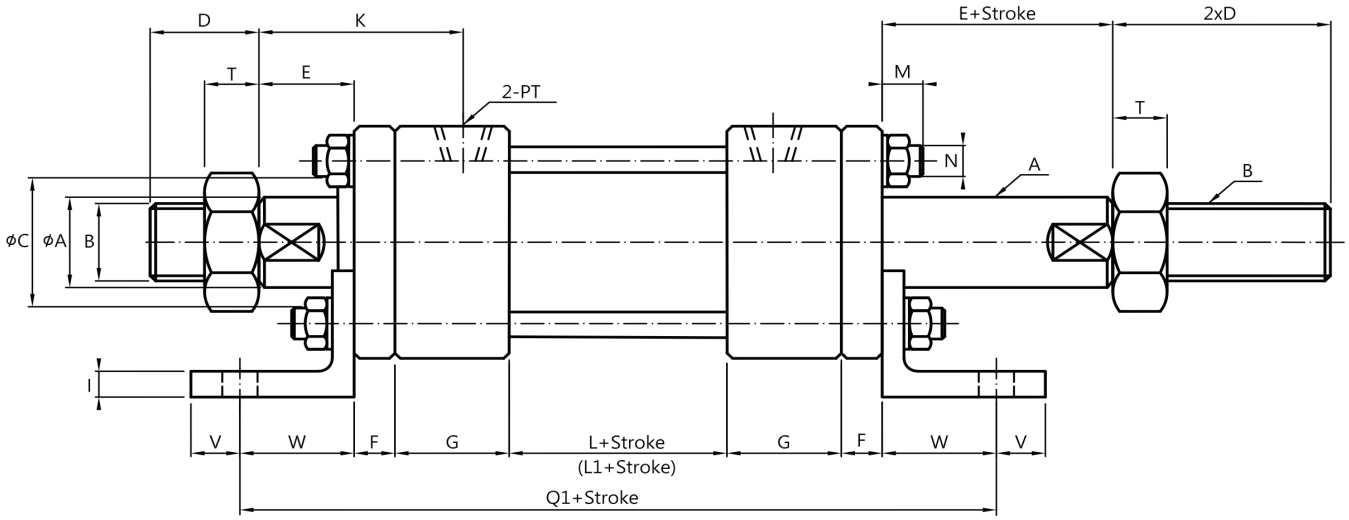

註記：L1感應式油壓缸基本長度

Note: Basic length of L1 induction hydraulic cylinder

缸徑 Bore dia.	活塞桿 Rod series.	本體尺寸 Main body size & 按裝相關尺寸 Mountinging dimension																									
		ØA	B	ØC	D	E	F	G	H	K	L	L1	M	N	PT	Q	Q1	R	S	I	U	V	W	ØX	Y	Z	T
Ø40	C B	20 25	M18P1.5 M22P1.5	35 40	25 30	20	11	36	26	54	50	55	13	M10P1.5	1/4”	187	197	65	45	8	45	13	32	11	75.5	43	15 17
Ø50	C B	25 30	M22P1.5 M26P1.5	40 45	30 35	30	13	42	34	70	50	55	13	M10P1.5	3/8”	209	230	75	52	8	52	15	35	13	87.5	50	17 18
Ø63	C B	30 35	M26P1.5 M30P1.5	45 50	35 40	35	15	42	34	77	50	55	15	M12P1.75	3/8”	225	248	90	63	10	63	18	42	15	105	60	18 20
Ø80	C B	35 40	M30P1.5 M35P1.5	50 55	40 45	35	18	46	40	79	50	60	17	M16P1.5	1/2”	254	278	110	80	12	80	20	50	18	127	72	20 20
Ø100	C B	45 50	M40P1.5 M45P1.5	60 65	45 55	40	20	50	40	90	69	74	19	M18P1.5	1/2”	289	319	135	98	12	98	23	55	20	152.5	85	20 20
Ø125	C B	50 60	M45P1.5 M50P2.0	65 75	55 65	45	24	58	48	104	69	74	21	M22P1.5	3/4”	331	365	165	122	15	122	29	66	24	187.5	105	20 20
Ø150	C B	60 70	M50P2.0 M60P2.0	75 85	60 80	50	28	58	48	113	69	74	23	M24P1.5	3/4”	353	391	195	148	18	148	30	75	28	211	123	20 20
Ø180	C B	70 80	M60P2.0 M70P2.0	85 100	110 140	55	33	68	58	127	90	90	25	M30P1.5	1”	419	462	235	182	20	182	40	85	33	265.5	148	20 20
Ø200	C B	80 100	M70P2.0 M90P2.0	100 120	120 150	55	37	68	58	137	90	90	27	M32P2.0	1”	449	496	262	200	25	200	40	98	36	296	165	20 20
Ø224	C B	100 110	M90P2.0 M100P2.0	120 130	140 180	60	41	68	58	146	90	90	29	M32P2.0	1”	487	538	292	225	30	225	45	115	41	331	185	20 20
Ø250	C B	110 125	M100P2.0 M110P2.0	130 145	150 195	65	46	68	58	169	90	90	31	M38P2.0	1 1/4”	522	578	325	250	35	250	50	130	46	370.5	208	20 20

OJ CA Type I

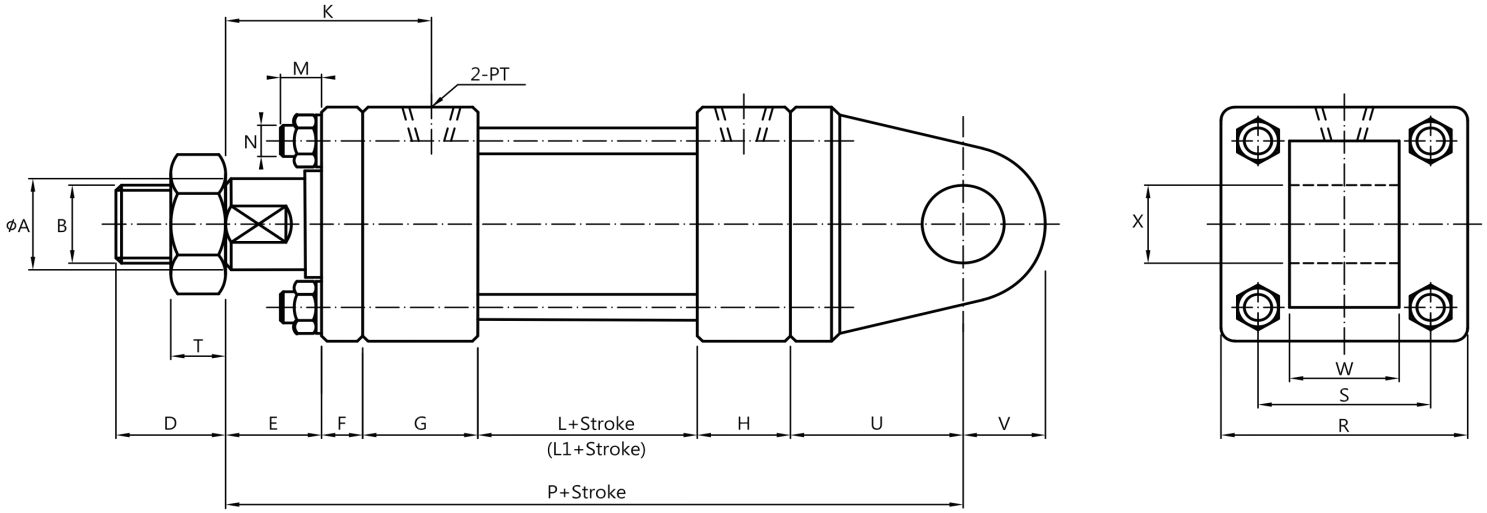

OJ CB Type

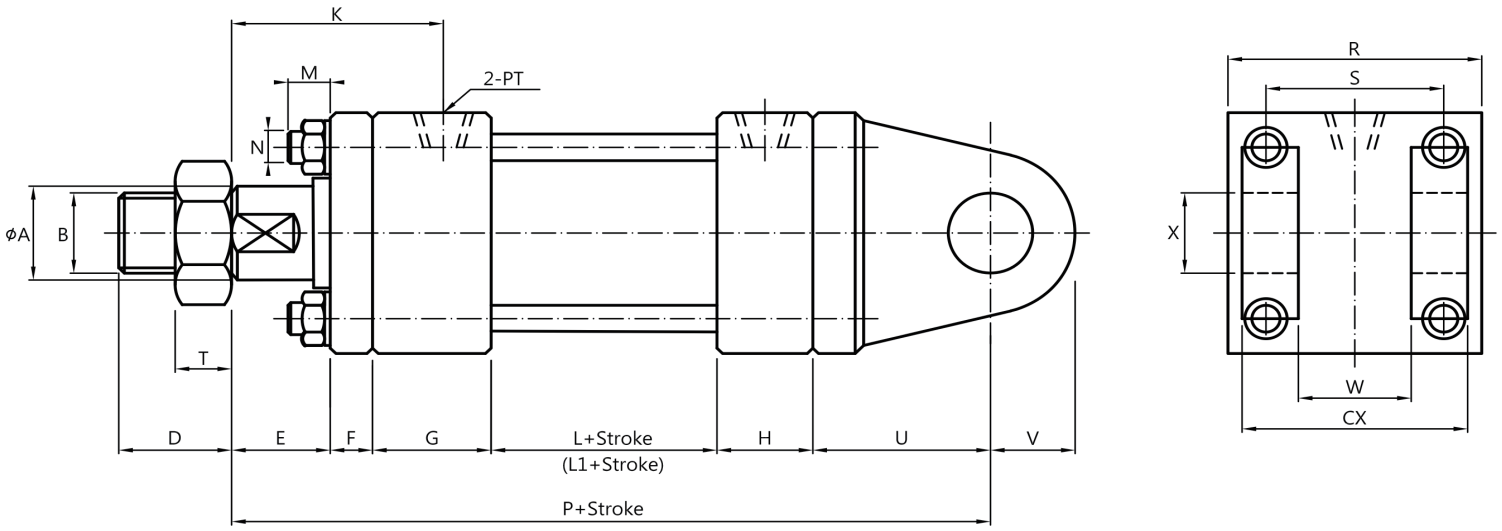

註記：L1感應式油壓缸基本長度

Note: Basic length of L1 induction hydraulic cylinder

缸徑 Bore dia.	活塞桿 Rod ser ies.	本體尺寸 Main body size & 按裝相關尺寸 Mountinging dimension																					
		ØA	B	D	E	F	G	H	K	L	L1	M	N	P	PT	R	S	U	V	W	X	CX	T
Ø40	C B	20 25	M18P1.5 M22P1.5	25 30	20	11	36	26	54	50	55	13	M10P1.5	181	1/4”	65	45	38	16	25	16	50	15 17
Ø50	C B	25 30	M22P1.5 M26P1.5	30 35	30	13	42	34	70	50	55	13	M10P1.5	214	3/8”	75	52	45	20	31.5	20	63.5	17 18
Ø63	C B	30 35	M26P1.5 M30P1.5	35 40	35	15	42	34	77	50	55	15	M12P1.75	239	3/8”	90	63	63	30	40	30	80	18 20
Ø80	C B	35 40	M30P1.5 M35P1.5	40 45	35	18	46	40	79	50	60	17	M16P1.5	261	1/2”	110	80	72	30	40	30	80	20 20
Ø100	C B	45 50	M40P1.5 M45P1.5	45 55	40	20	50	40	90	69	74	19	M18P1.5	303	1/2”	135	98	84	40	50	40	100	20 20
Ø125	C B	50 60	M45P1.5 M50P2.0	55 65	45	24	58	48	104	69	74	21	M22P1.5	307	3/4”	165	122	63	50	63	50	125	20 20
Ø150	C B	60 70	M50P2.0 M60P2.0	60 80	50	28	58	48	113	69	74	23	M24P1.5	333	3/4”	195	148	80	63	80	63	160	20 20
Ø180	C B	70 80	M60P2.0 M70P2.0	110 140	55	33	68	58	127	90	90	25	M30P1.5	404	1”	235	182	100	80	100	80	200	20 20
Ø200	C B	80 100	M70P2.0 M90P2.0	120 150	55	37	68	58	137	90	90	27	M32P2.0	423	1”	262	200	115	90	125	90	250	20 20
Ø224	C B	100 110	M90P2.0 M100P2.0	140 180	60	41	68	58	146	90	90	29	M32P2.0	442	1”	292	225	125	100	125	100	250	20 20
Ø250	C B	110 125	M100P2.0 M110P2.0	150 195	65	46	68	58	169	90	90	31	M38P2.0	452	1 1/4”	325	250	125	100	125	100	250	20 20

OJ TC Type I

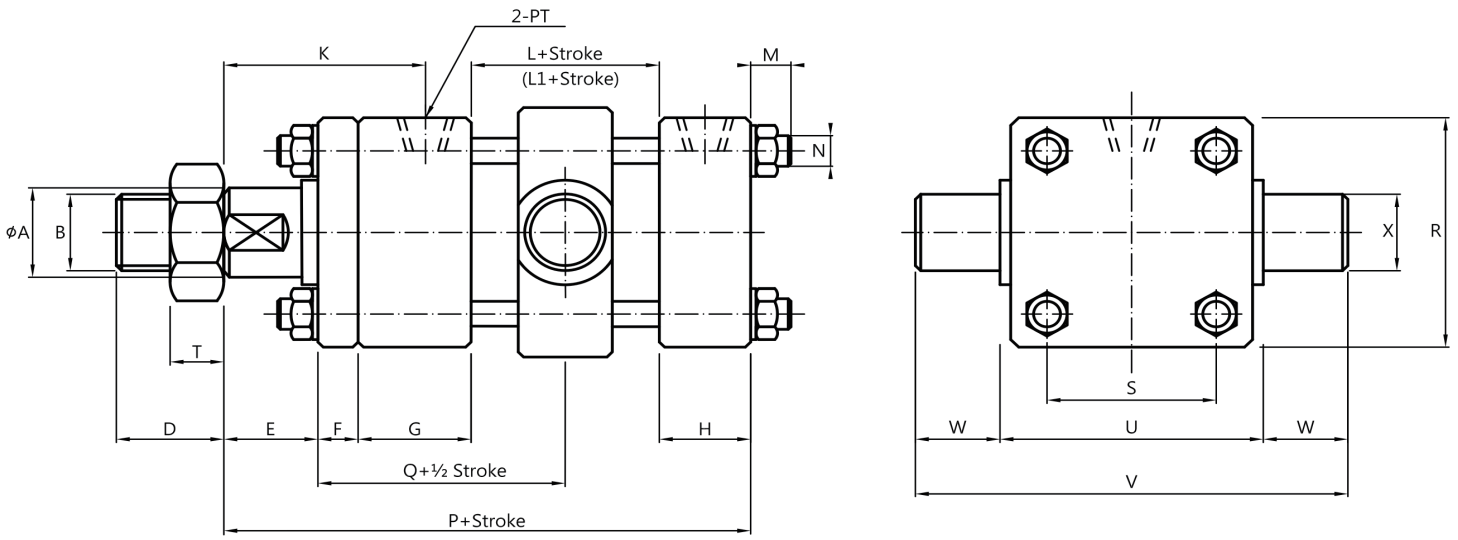

OJ TC Type II

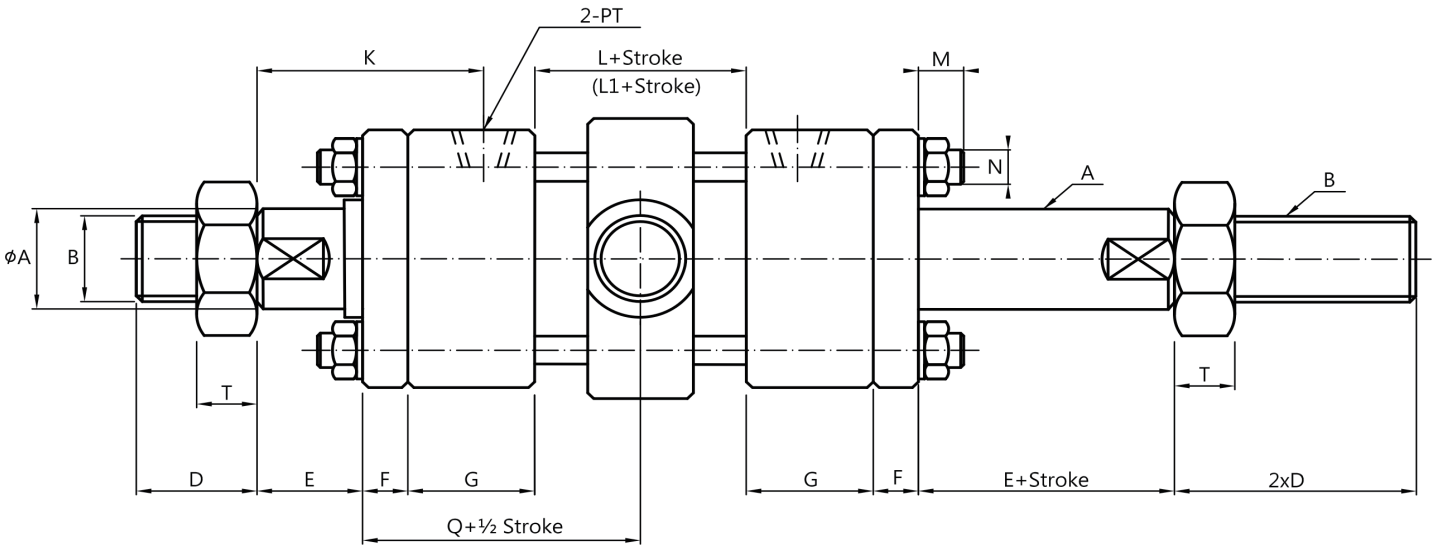

註記：L1感應式油壓缸基本長度

Note: Basic length of L1 induction hydraulic cylinder

缸徑 Bore dia.	活塞桿 Rod ser ies.	本體尺寸 Main body size & 按裝相關尺寸 Mountinging dimension																					
		ØA	B	D	E	F	G	H	K	L	L1	M	N	P	PT	Q	R	S	U	V	W	X	T
Ø40	C B	20 25	M18P1.5 M22P1.5	25 30	20	11	36	26	54	50	55	13	M10P1.5	143	1/4”	72	65	45	69	109	20	20	15 17
Ø50	C B	25 30	M22P1.5 M26P1.5	30 35	30	13	42	34	70	50	55	13	M10P1.5	169	3/8”	80	75	52	85	135	25	25	17 18
Ø63	C B	30 35	M26P1.5 M30P1.5	35 40	35	15	42	34	77	50	55	15	M12P1.75	176	3/8”	82	90	63	98	158	30	30	18 20
Ø80	C B	35 40	M30P1.5 M35P1.5	40 45	35	18	46	40	79	50	60	17	M16P1.5	189	1/2”	89	110	80	118	178	30	30	20 20
Ø100	C B	45 50	M40P1.5 M45P1.5	45 55	40	20	50	40	90	69	74	19	M18P1.5	219	1/2”	104.5	135	98	145	225	40	40	20 20
Ø125	C B	50 60	M45P1.5 M50P2.0	55 65	45	24	58	48	104	69	74	21	M22P1.5	244	3/4”	116.5	165	122	175	275	50	50	20 20
Ø150	C B	60 70	M50P2.0 M60P2.0	60 80	50	28	58	48	113	69	74	23	M24P1.5	253	3/4”	120.5	195	148	206	332	63	63	20 20
Ø180	C B	70 80	M60P2.0 M70P2.0	110 140	55	33	68	58	127	90	90	25	M30P1.5	304	1”	141	235	182	243	403	80	80	20 20
Ø200	C B	80 100	M70P2.0 M90P2.0	120 150	55	37	68	58	137	90	90	27	M32P2.0	308	1”	145	262	200	272	452	90	90	20 20
Ø224	C B	100 110	M90P2.0 M100P2.0	140 180	60	41	68	58	146	90	90	29	M32P2.0	317	1”	149	292	225	300	500	100	100	20 20
Ø250	C B	110 125	M100P2.0 M110P2.0	150 195	65	46	68	58	169	90	90	31	M38P2.0	327	1 1/4”	159	325	250	335	535	100	100	20 20

OJ TA Type I

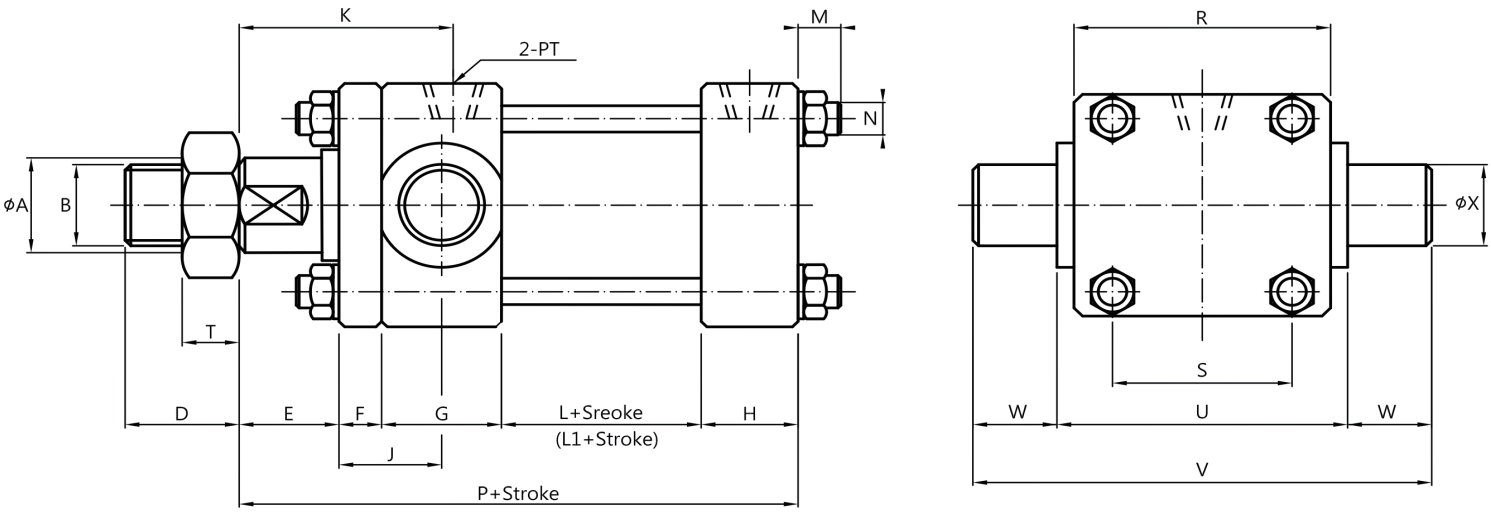

OJ TA Type II

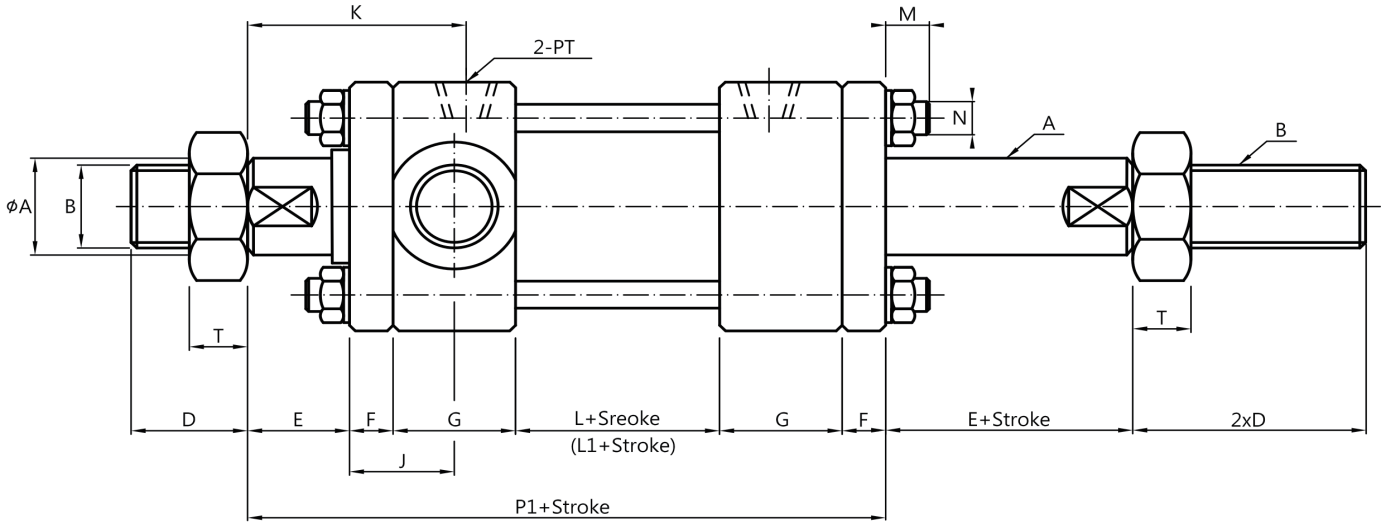

註記：L1感應式油壓缸基本長度

Note: Basic length of L1 induction hydraulic cylinder

缸徑 Bore dia.	活塞桿 Rod ser ies.	本體尺寸 Main body size & 按裝相關尺寸 Mountinging dimension																						
		ØA	B	D	E	F	G	H	J	K	L	L1	M	N	P	P1	PT	R	S	U	V	W	ØX	T
Ø40	C B	20 25	M18P1.5 M22P1.5	25 30	20	11	36	26	29	54	50	55	13	M10P1.5	143	164	1/4”	65	45	69	109	20	20	15 17
Ø50	C B	25 30	M22P1.5 M26P1.5	30 35	30	13	42	34	34	68	50	55	13	M10P1.5	169	190	3/8”	75	52	85	135	25	25	17 18
Ø63	C B	30 35	M26P1.5 M30P1.5	35 40	35	15	42	34	36	75	50	55	15	M12P1.75	176	199	3/8”	90	63	98	158	30	30	18 20
Ø80	C B	35 40	M30P1.5 M35P1.5	40 45	35	18	46	40	41	79	50	60	17	M16P1.5	189	213	1/2”	110	80	118	178	30	30	20 20
Ø100	C B	45 50	M40P1.5 M45P1.5	45 55	40	20	50	40	45	90	69	74	19	M18P1.5	219	249	1/2”	135	98	145	225	40	40	20 20
Ø125	C B	50 60	M45P1.5 M50P2.0	55 65	45	24	58	48	53	104	69	74	21	M22P1.5	244	278	3/4”	165	122	175	275	50	50	20 20
Ø150	C B	60 70	M50P2.0 M60P2.0	60 80	50	28	58	48	57	113	69	74	23	M24P1.5	253	291	3/4”	195	148	206	332	63	63	20 20
Ø180	C B	70 80	M60P2.0 M70P2.0	110 140	55	33	68	58	67	127	90	90	25	M30P1.5	304	347	1”	235	182	243	403	80	80	20 20
Ø200	C B	80 100	M70P2.0 M90P2.0	120 150	55	37	68	58	71	137	90	90	27	M32P2.0	308	355	1”	262	200	272	452	90	90	20 20
Ø224	C B	100 110	M90P2.0 M100P2.0	140 180	60	41	68	58	75	146	90	90	29	M32P2.0	317	368	1”	292	225	300	500	100	100	20 20
Ø250	C B	110 125	M100P2.0 M110P2.0	150 195	65	46	68	58	80	169	90	90	30	M38P2.0	327	383	1 1/4”	325	250	335	535	100	100	20 20

附件
Attachment

I 接頭
I Adapter

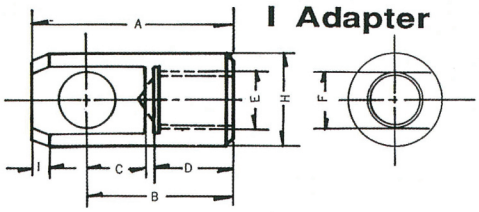

Y 接頭
Y Adapter

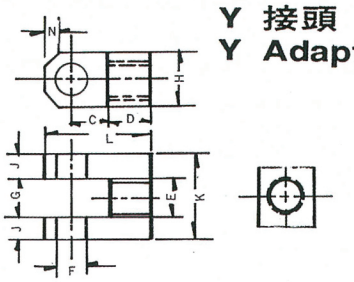

缸徑 Bore dia.	A	B	C	D	E	ΦF	G	H	I	J	K	L	N
40	66	50	20	25	M18×P1.5 M22×P1.5	16	16	30	5	7	30	66	8
50	75	55	25	30	M22×P1.5 M26×P1.5	20	20	40	7	10	40	75	10
63	80	60	25	30	M26×P1.5 M30×P1.5	20	20	44.5	9	10	44.5	80	10
80	105	75	35	40	M30×P1.5 M35×P1.5	30	30	60	9	15	60	105	15
100	130	90	40	50	M40×P1.5 M45×P1.5	40	40	80	12	20	80	130	15
125	155	105	50	55	M45×P1.5 M50×P2	50	50	100	15	25	100	155	20
150	170	120	55	65	M50×P2 M60×P2	50	50	100	20	25	100	170	20
180	195	135	65	70	M60×P2 M70×P2	60	60	120	25	30	120	195	25
200	280	200	90	80	M70×P2 M90×P2	80	80	150	30	35	150	280	30
224	330	230	105	90	M90×P2 M100×P2	100	100	200	30	50	200	330	30
250	330	230	105	90	M100×P2 M110×P2	100	100	200	30	50	200	330	30

特 點 說 明 ：

1.表列規格參照JIS標準及CNS國家標準精心製造。
2.鋼管採用無縫冷間鋼管，內徑加工精度高，其表面粗度在Ho ～1.5S(即0.0015mm)油環壽命增長。
3.O ring採用原裝進口之高級品，壽命特長。
4.標準品之各種零件均有互換性，保養容易。
5.使用壓力標準可分三種：a)0-70kgf/cm² 低壓。
b)70-140kgf/cm² 中壓。
c)140-210kgf/cm² 高壓。
6.最大內徑及行程標準型為500×3000mm行程以內，其它規格外之產品或特殊性能諸如：耐熱、高速及特及特殊環境使用等，本公司接受訂製。
7.品質嚴格管制，所有產品均經測試，始行出廠。

Features:

1.The mentioned specifications which is accorded JIS standard & CNS national standard and manufactured honestly.
2.The cylinder tube is adopted cold seamless steel tube and inner portion by high precision processing. The surface roughness is at Ho ～1.5S(i.e 0.0015mm), so far,the O ring servicing life must prolonged.
3.The O ring is adopted originally and from imported long servicing life.
4.The each parts for standard products which can be replaced, easy of servicing.
5.The operating pressure standard can be divided into 3 models:
a.0-70kgf/cm² low pressure. b.70-140kgf/cm² medium pressure. c.140-210kg f/cm² high pressure.
6.The max.bore dia.and stroke is within bore 500×3000mm for standard model. As for other products or with special character such as thermo-resisted high speed and operated at special condition etc,, which products made on customer's request.
7.The quality is controlled strictly and total products are passed through each testing before delivery.

※本公司尚接受使用於環境惡劣場所之油壓缸訂製(諸如耐熱、耐酸鹼、高速作業等)

Our company also available the hyd. cylinder on requested which employed in inferior condition (Such as:Thermal-Resistant. Acid & Alkalis Resistant and Hi-Speed Actioned etc.,)

OMA Series

CA-I Type
Shaft Teeth Screw On (Round Type) (Large model)
軸牙式 (圓型、大型)

工作壓力:210kg/cm²
Operating Pressure

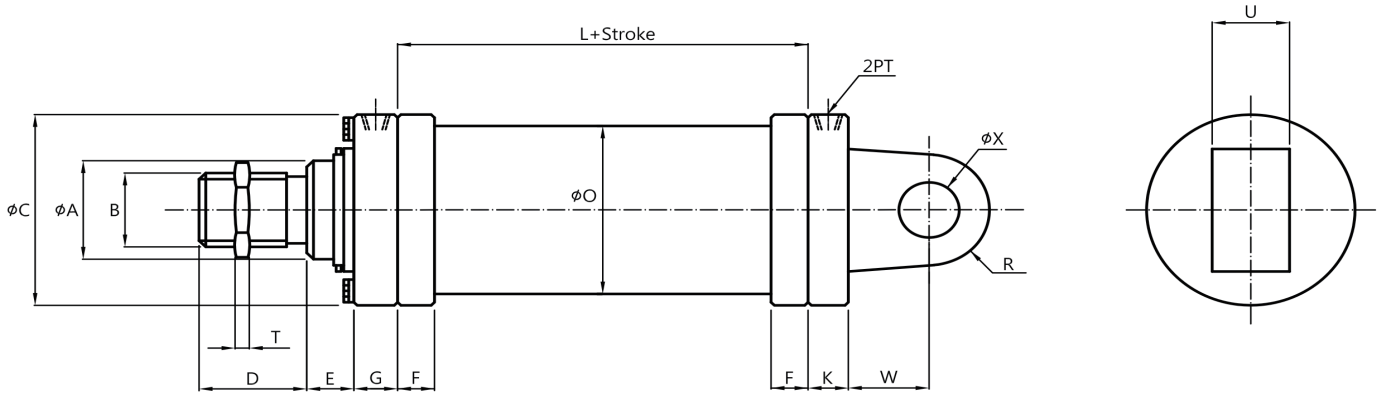

缸徑 Bore dia.	ØA	B	ØC	D	E	F	G	L	K	R	ØO	ØX	U	W	T	PT
Ø160	110	M100×P3	230	140	60	45	60	110	55	70	205	70	100	100	20	3/4”
Ø180	125	M110×P4	260	150	60	50	60	110	55	80	216	80	110	110	20	3/4”
Ø200	140	M120×P4	270	160	70	55	65	110	60	90	242	90	115	120	20	1”
Ø224	160	M120×P4	310	160	70	55	65	130	60	90	273	90	115	120	20	1”
Ø250	180	M150×P4	330	190	80	65	75	150	68	100	298	100	120	130	30	1 1/4”
Ø280	200	M150×P4	370	190	80	65	75	150	68	110	340	110	130	140	30	1 1/4”
Ø300	224	M180×P4	390	220	90	70	85	170	74	120	355	120	140	150	30	1 1/2”
Ø350	250	M200×P4	460	220	100	80	85	200	74	140	425	140	150	170	30	1 1/2”

CA-II Type
Shaft Key Insert
軸槽式

工作壓力:210kg/cm²
Operating Pressure

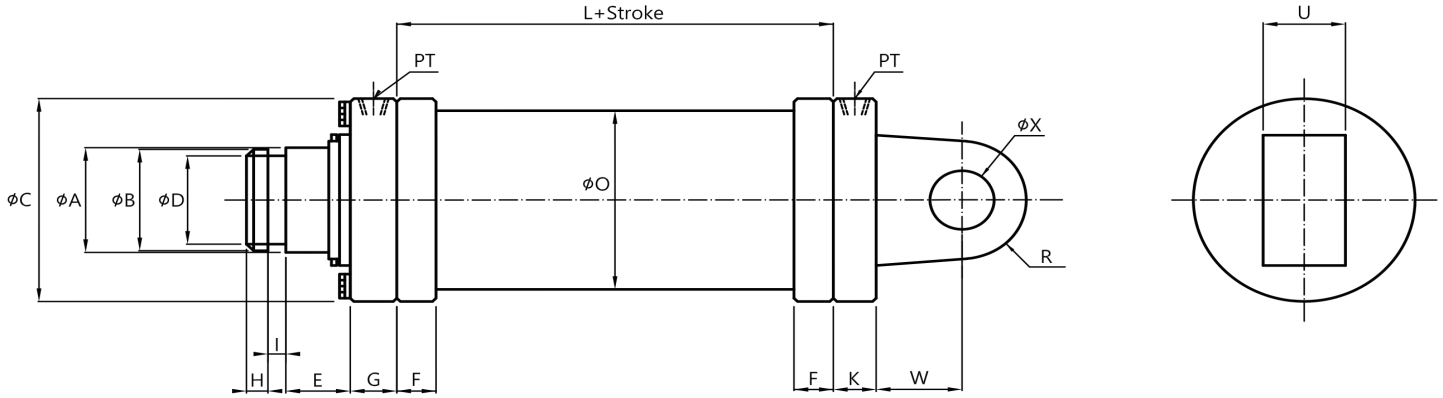

缸徑 Bore dia.	ØA	ØB	ØC	ØD	E	F	H	I	G	L	K	R	ØO	ØX	U	W	PT
Ø160	110	105	230	85	80	45	25	20	60	110	55	70	205	70	100	100	3/4”
Ø180	125	120	260	100	80	50	25	20	60	110	55	80	216	80	110	110	3/4”
Ø200	140	135	270	115	90	55	30	25	65	110	60	90	242	90	115	120	1”
Ø224	160	155	310	135	90	55	30	25	65	130	60	90	273	90	115	120	1”
Ø250	180	175	330	150	100	65	35	30	75	150	68	100	298	100	120	130	1 1/4”
Ø280	200	195	370	170	100	65	35	30	75	150	68	110	340	110	130	140	1 1/4”
Ø300	224	220	390	190	120	70	40	35	85	170	74	120	355	120	140	150	1 1/2”
Ø350	250	245	460	220	120	80	40	35	85	200	74	140	425	140	150	170	1 1/2”

OMB Series

FA-I Type
Shaft Teeth Screw On (Round Type)(Large Model)
軸牙式 (圓型、大型)

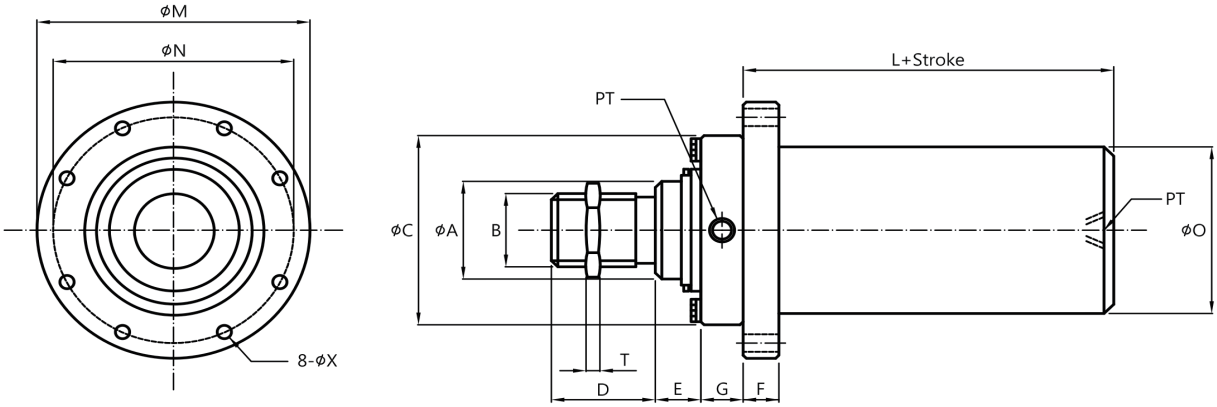

缸徑 Bore dia.	ØA	B	ØC	D	E	F	G	L	ØM	ØN	ØO	ØX	T	PT
Ø160	110	M100×P3	230	140	60	60	60	155	320	280	205	18	20	3/4”
Ø180	125	M110×P4	260	150	60	65	60	160	360	310	216	20	20	3/4”
Ø200	140	M120×P4	270	160	70	70	65	165	380	330	242	20	20	1”
Ø224	160	M120×P4	310	160	70	70	65	180	420	370	273	22	20	1”
Ø250	180	M150×P4	330	190	80	80	75	200	450	390	298	24	30	1 1/4”
Ø280	200	M150×P4	370	190	80	90	75	210	500	440	340	26	30	1 1/4”
Ø300	224	M180×P4	390	220	90	100	85	220	515	450	355	28	30	1 1/2”
Ø350	250	M200×P4	460	220	100	120	85	265	600	540	425	32	30	1 1/2”

FA-II Type
Shaft Key Insert
軸槽式

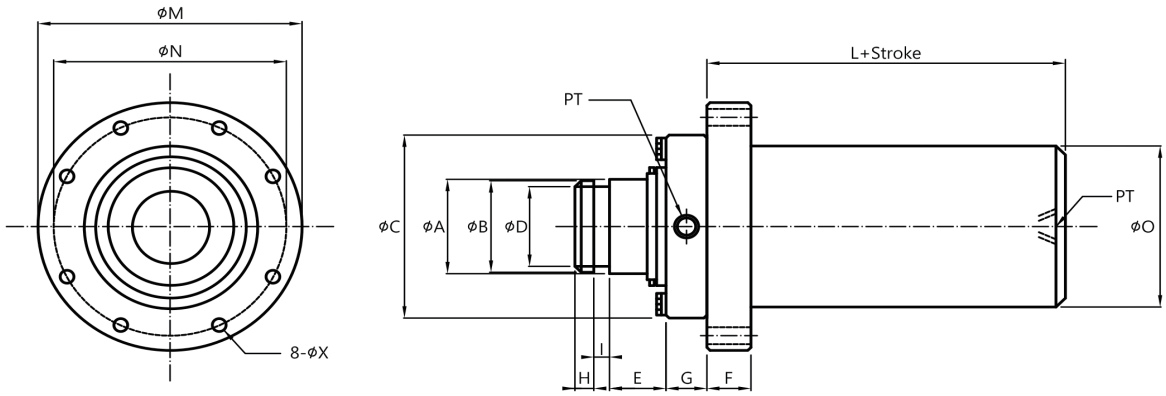

缸徑 Bore dia.	ØA	ØB	ØC	ØD	E	F	H	I	G	L	ØM	ØN	ØO	ØX	PT
Ø160	110	105	230	85	80	60	25	20	60	155	320	280	205	18	3/4”
Ø180	125	120	260	100	80	65	25	20	60	160	360	310	216	20	3/4”
Ø200	140	135	270	115	90	70	30	25	65	165	380	330	242	20	1”
Ø224	160	155	310	135	90	70	30	25	65	180	420	370	273	22	1”
Ø250	180	175	330	150	100	80	35	30	75	205	450	390	298	24	1 1/4”
Ø280	200	195	370	170	100	90	35	30	75	210	500	440	340	26	1 1/4”
Ø300	224	220	390	190	120	100	40	35	85	220	515	450	355	28	1 1/2”
Ø350	250	245	460	220	120	120	40	35	85	265	600	540	425	32	1 1/2”

OMC Series (Round Type)(Small Type)

OMSD型 (圓型、小型)

工作壓力：140kgf/cm²
Operating Pressure

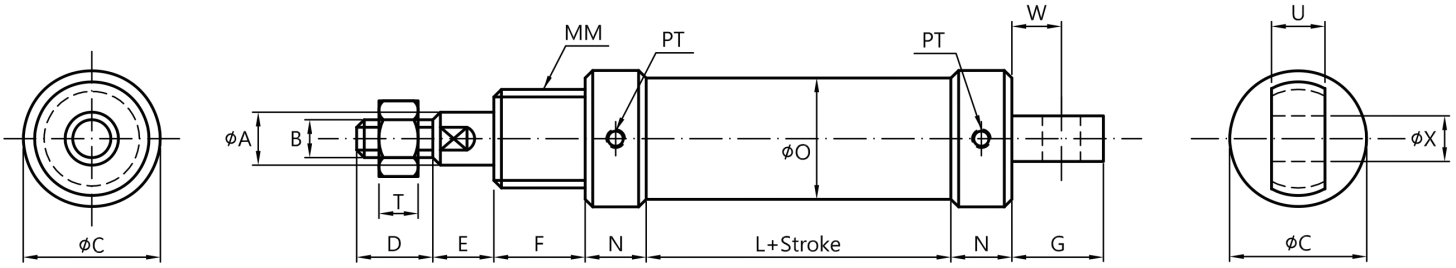

缸徑 Bore dia.	ØA	B	ØC	D	E	F	G	L	MM	N	ØO	ØX	U	W	T	PT
Ø20	12	M10×P1.5	32	20	14	22	22	40	M22×P1.5	16	30	10	14	12	17	1/8”
Ø25	14	M12×P1.75	36	20	16	24	24	44	M30×P1.5	16	35	12	14	13	20	1/8”
Ø30	18	M16×P1.5	40	25	18	24	24	54	M35×P1.5	22	40	12	16	13	20	1/4”
Ø40	20	M18×P1.5	50	25	20	32	32	54	M40×P1.5	22	50	16	20	18	20	1/4”

OMFA (CA、CB) 型

工作壓力：140kgf/cm²
Operating Pressure

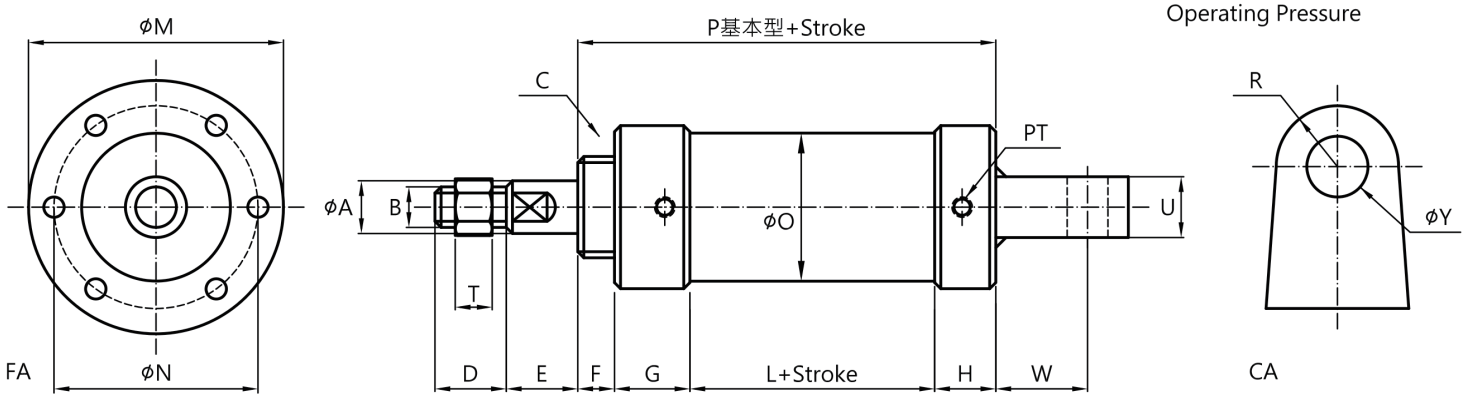

缸徑 Bore dia.	ØA	B	C	D	E	F	G	H	L	ØM	ØN	ØO	P	R	ØX	ØY	W	U	T	PT
Ø50	25	M22×P1.5	M45×P1.5	30	30	15	35	25	60	100	80	60	135	20	11	20	30	25	17	1/4”
Ø63	30	M26×P1.5	M65×P1.5	35	35	18	37	30	60	125	100	73	145	30	14	30	45	30	18	3/8”
Ø70	35	M30×P1.5	M70×P1.5	40	40	18	37	30	66	130	105	80	151	30	14	30	45	30	20	3/8”
Ø80	40	M35×P1.5	M80×P2	45	45	20	40	30	80	155	125	90	170	35	18	35	50	35	20	3/8”
Ø90	45	M40×P1.5	M90×P2	50	50	20	45	35	95	165	135	100	195	40	18	40	55	35	20	1/2”
Ø100	50	M45×P2	M100×P2	55	55	25	45	40	101	185	155	114	211	40	20	40	55	40	20	1/2”
Ø110	55	M50×P2	M110×P2	60	60	25	45	40	105	205	170	125	215	50	20	50	70	40	20	3/4”
Ø125	60	M55×P2	M125×P2	60	60	30	55	50	105	220	180	140	240	50	20	50	70	63	20	3/4”
Ø140	65	M60×P2	M140×P2	65	65	36	55	50	115	250	205	160	256	60	24	60	95	63	20	3/4”
Ø150	70	M65×P2	M150×P2	70	70	36	55	50	115	260	220	168	256	60	24	60	95	80	20	3/4”

OMD Series (Round Type)(Small Type)(圓型)(小型)

CA-I Type (產業機械) (Production Machinery)

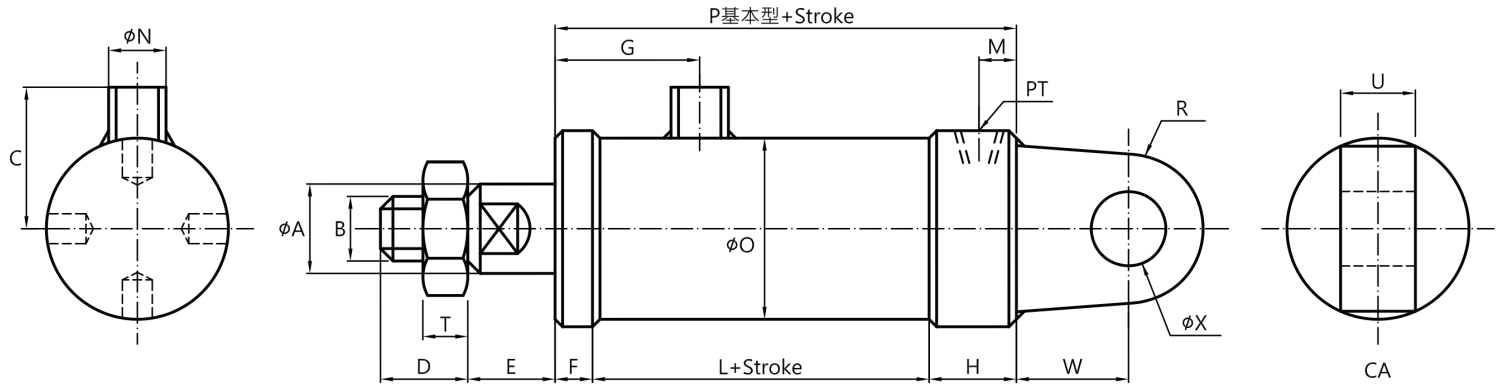

缸徑 Bore dia.	ØA	B	C	D	E	F	G	H	L	M	ØN	ØO	P	R	ØX	W	U	T	PT
Ø50	25	M22×P1.5	45	30	30	15	53	30	80	12	20	60	125	20	20	30	25	17	1/4”
Ø63	30	M26×P1.5	57	35	35	15	58	35	85	15	23	73	135	30	30	45	30	18	3/8”
Ø70	35	M30×P1.5	60	40	35	15	65	35	92	15	23	80	142	30	30	45	30	20	3/8”
Ø80	40	M35×P1.5	65	45	40	15	65	35	92	15	23	90	142	35	35	50	35	20	3/8”
Ø90	45	M40×P1.5	70	50	40	15	68	45	100	20	28	100	160	40	40	55	35	20	1/2”
Ø100	50	M45×P2	75	55	45	15	68	45	100	20	28	114	160	40	40	55	40	20	1/2”
Ø110	55	M50×P2	80	60	45	15	68	45	100	20	28	125	160	50	50	70	40	20	1/2”
Ø125	60	M55×P2	94	60	45	18	74	55	128	25	35	140	201	50	50	70	63	20	3/4”
Ø140	65	M60×P2	104	65	50	18	75	55	135	25	35	160	208	60	60	95	63	20	3/4”
Ø150	70	M65×P2	108	70	50	18	76	55	137	25	35	168	210	60	60	95	80	20	3/4”

CA-II Type

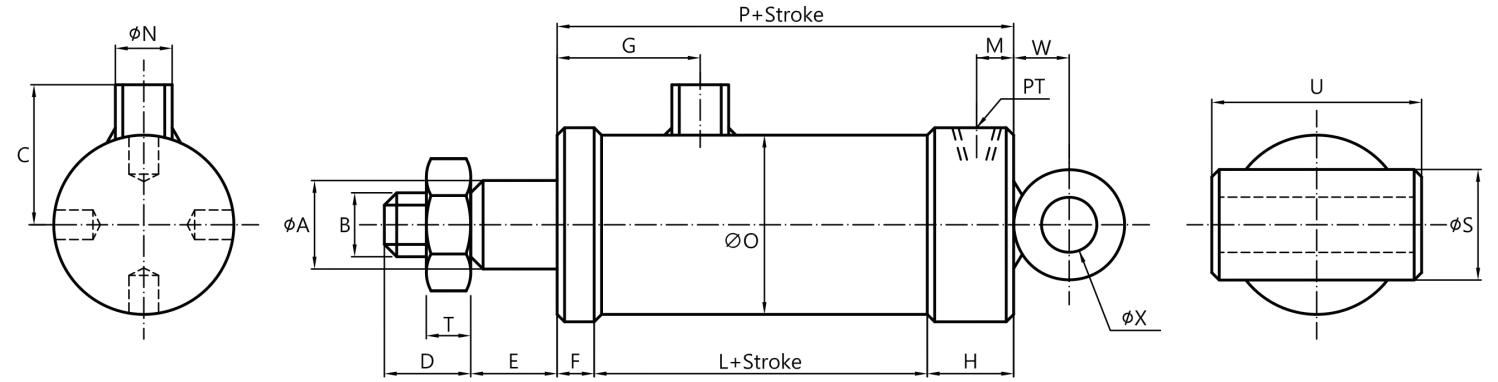

缸徑 Bore dia.	ØA	B	C	D	E	F	G	H	L	M	ØN	ØO	P	ØS	ØX	W	U	T	PT
Ø50	25	M22×P1.5	45	30	30	15	53	30	80	12	20	60	125	38	25	19	70	17	1/4”
Ø63	30	M26×P1.5	57	35	35	15	58	35	85	15	23	73	135	45	30	22.5	85	18	3/8”
Ø70	35	M30×P1.5	60	40	35	15	65	35	92	15	23	80	142	45	30	22.5	95	20	3/8”
Ø80	40	M35×P1.5	65	45	40	15	65	35	92	15	23	90	142	50	35	25	105	20	3/8”
Ø90	45	M40×P1.5	70	50	40	15	68	45	100	20	28	100	160	60	40	30	115	20	1/2”
Ø100	50	M45×P2	75	55	45	15	68	45	100	20	28	114	160	60	40	30	130	20	1/2”
Ø110	55	M50×P2	80	60	45	15	68	45	100	20	28	125	160	75	50	37.5	140	20	1/2”
Ø125	60	M55×P2	94	60	45	18	74	55	128	25	35	140	201	75	50	37.5	160	20	3/4”
Ø140	65	M60×P2	104	65	50	18	75	55	135	25	35	160	208	85	60	42.5	180	20	3/4”
Ø150	70	M65×P2	108	70	50	18	76	55	137	25	35	168	210	85	60	42.5	190	20	3/4”

OM-E Series 同步油壓缸(停車設備)
Synchronous Hyd.Cylinder (parking Equipment)

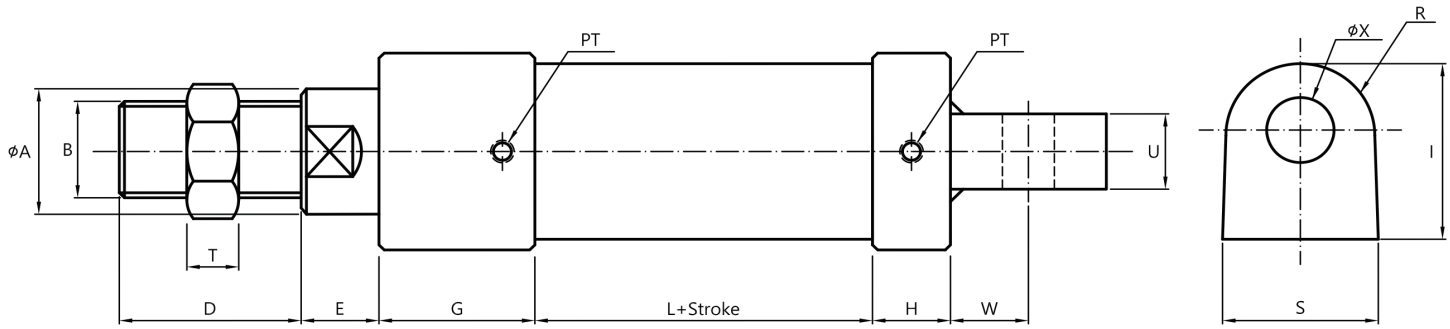

類別 Type	管徑 Tube dia.	活塞桿 Rod ØA	B	D	E	G	H	L	R	S	I	U	ØX	PT	Rod鑽孔式 Rod drills	T	W
1	Ø60	45	M35×P2.0	60	30	60	30	130	30	60	70	30	26	3/8”	Ø26	20	45
	Ø75																
2	Ø63	50	M40×P2.0	70	30	60	30	130	30	60	70	30	26	3/8”	Ø26	20	45
	Ø80																
3	Ø80	60	M50×P2.0	80	40	70	40	150	35	70	80	35	36	1/2”	Ø30	20	55
	Ø100																
4	Ø100	75	M65×P2.0	90	40	70	40	150	40	80	95	40	41	1/2”	Ø40	20	55
	Ø125																

※本品亦可焊接成尾座平板式(FB型)
This unit also can be made flange mounting type(FB Type)

RAM-A Type

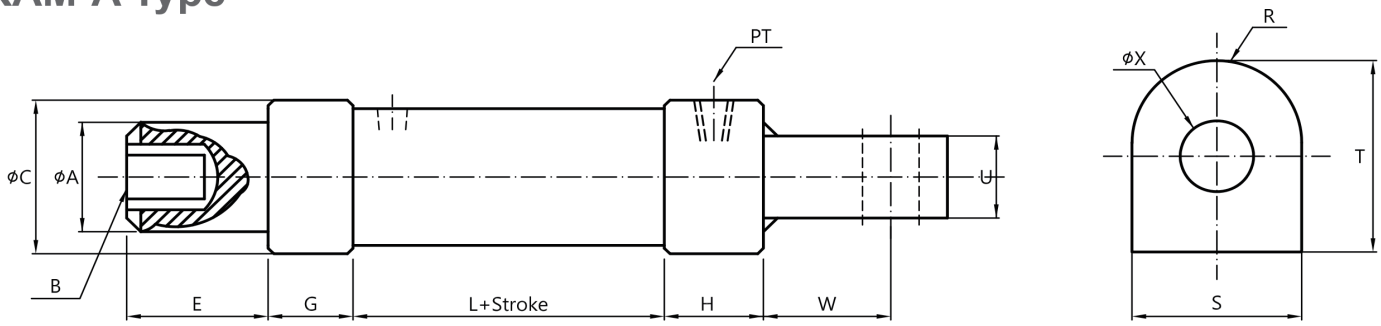

類別 Type	ØA	B	ØC	E	G	H	L	R	S	T	U	ØX	PT	W
1	80	M16×P2.0	Ø120	100	30	35	70	30	60	70	30	26	1/2”	45
2	100	M20×P2.5	Ø140	100	30	45	90	35	70	80	35	30	1/2”	50
3	125	M20×P2.5	Ø163	100	30	45	120	40	80	95	40	40	1/2”	60

※本品亦可焊接成尾座平板式(FB型)
This unit also can be made flange mounting type(FB Type)

RAM-B Type

※1.本型油壓缸之活塞桿為Ø140，Ø150，Ø160，Ø180，Ø200，Ø224，Ø250，Ø300，Ø350，Ø400，Ø450，Ø500，並可配合機械需求，另行設計製造。
※2.型式有FA、FB、CA型。
※1.This seies rod of hyp.cylinder are Ø140,Ø150,Ø160,Ø180,Ø200,Ø224,Ø250,Ø300,Ø350,Ø400,Ø450,Ø500 and can be designed＆made which accompanied with assorted machinery.
※2.The type which being with FA,FB,CA etc,,

OMT Series (Round Type)(Small Type)

SD TYPE (圓型、小型)

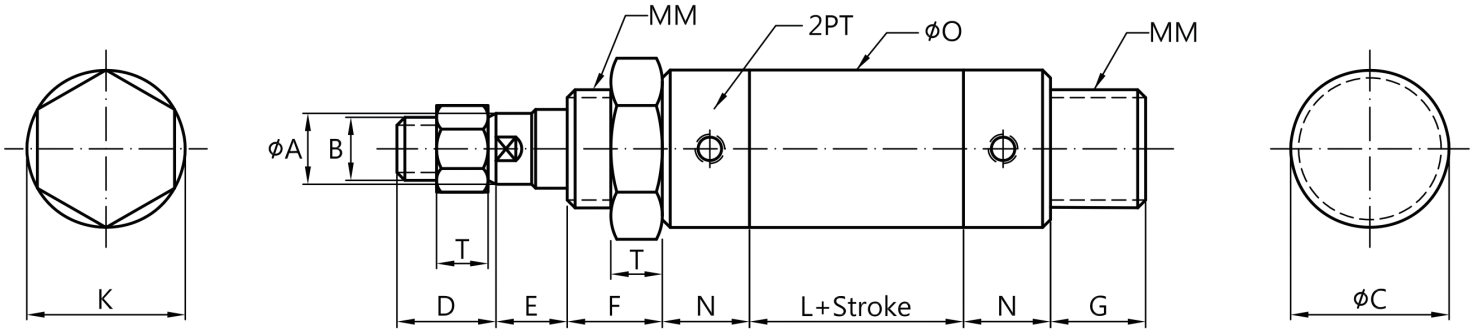

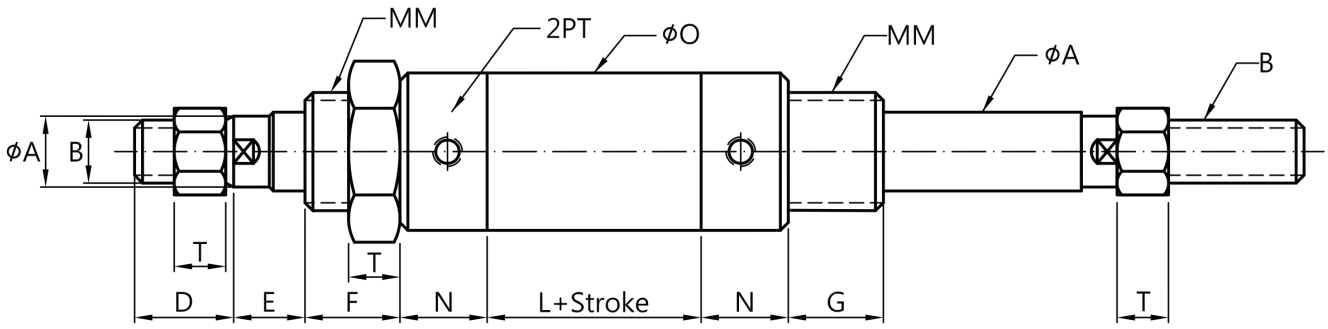

FA前端板 TYPE
FA front panel type

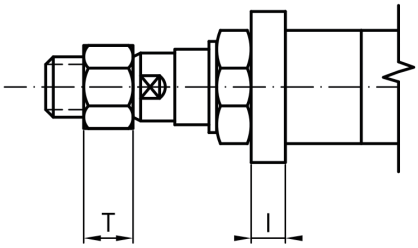

FB後端板 TYPE
FB rear panel type

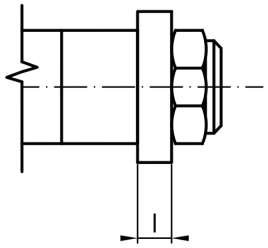

FA、FB板
FA、FB board

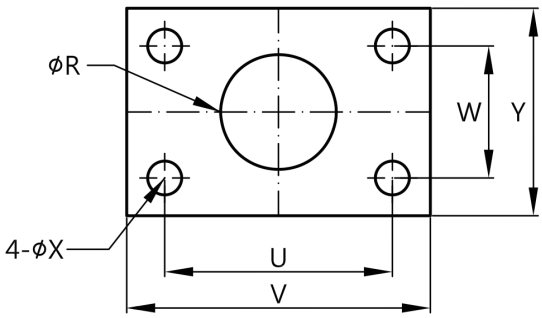

缸徑 Bore dia.	ØA	B	ØC	D	E	F	G	K	L	MM	N	ØO	PT	ØR	I	U	V	W	ØX	Y	T
Ø20	12	M10xP1.5	30	20	14	22	22	32	40	M22xP1.5	16	Ø30	1/8”	Ø22	9	40	60	30	9	45	17
Ø25	14	M12xP1.75	35	20	16	24	24	36	44	M26xP1.5	16	Ø35	1/8”	Ø26	9	50	70	30	9	45	18
Ø30	18	M16xP1.5	40	25	18	24	24	41	54	M35xP1.5	22	Ø40	1/4”	Ø35	9	60	80	35	9	55	20
Ø40	20	M18xP1.5	50	25	20	32	32	41	54	M40xP1.5	22	Ø50	1/4”	Ø40	11	70	95	45	12	65	20

薄型油壓缸 Mini-stroke Hyd.Cylinder

OJT Series

OJT Series內部構造與零件名稱

Internal structure and part name

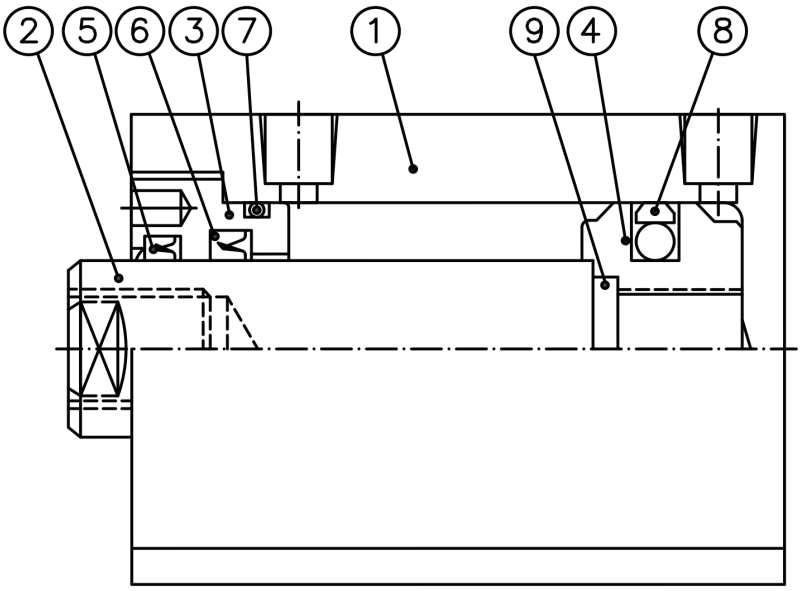

記號 Symbol	零件名稱 Part name	數量 Quantity
1	缸體 Cylinder block	1
2	活塞桿 Piston rod	1
3	前蓋 Front cover	1
4	活塞 Piston	1
5	活塞桿防塵封套 Piston rod dust jacket	1
6	活塞桿封套 Piston rod sleeve	1
7	前蓋O型環 Front cover O-ring	1
8	活塞油封 Piston oil seal	1
9	活塞內O型環 O-ring in the piston	1

油缸種類與安裝型式

Cylinder type and installation type

油缸種類 Cylinder type	標準式記號 Standard symbol	標準式圖形 Standard graphics	內徑 Inner diameter (mm)
複動油缸 Double acting cylinder	SD-A LA-A	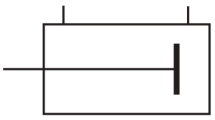	Ø20 Ø25 Ø32 Ø40 Ø50 Ø63 Ø80 Ø100
雙軸油缸 Double shaft cylinder	SD-B LA-B	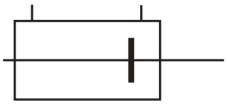	

OJT Series 薄型油壓缸
Thin hydraulic cylinder

SD型 單軸 Single Shaft

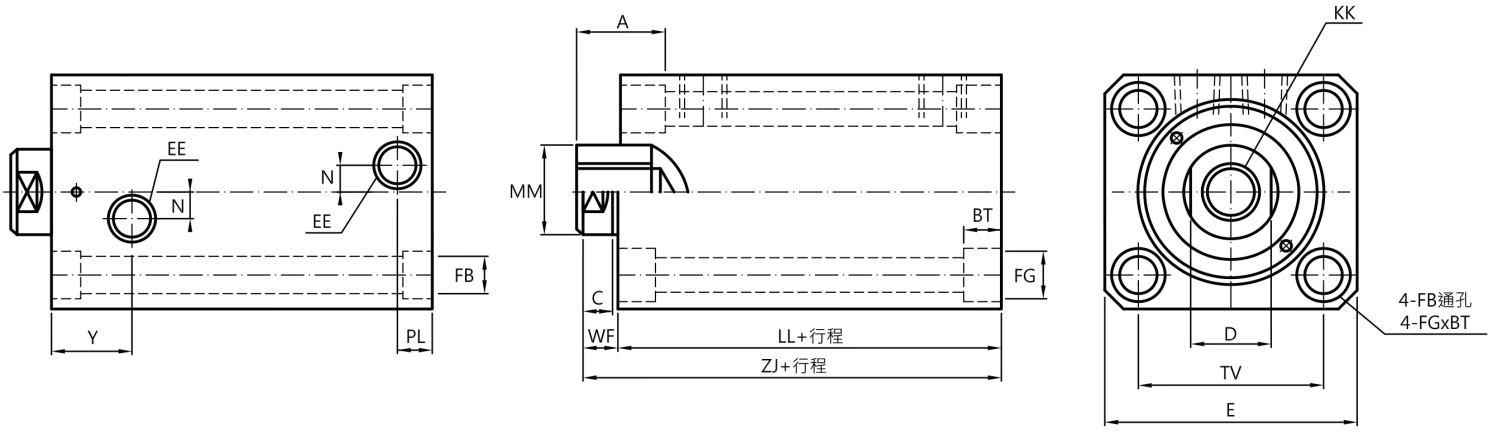

LA型 單軸 Single Shaft

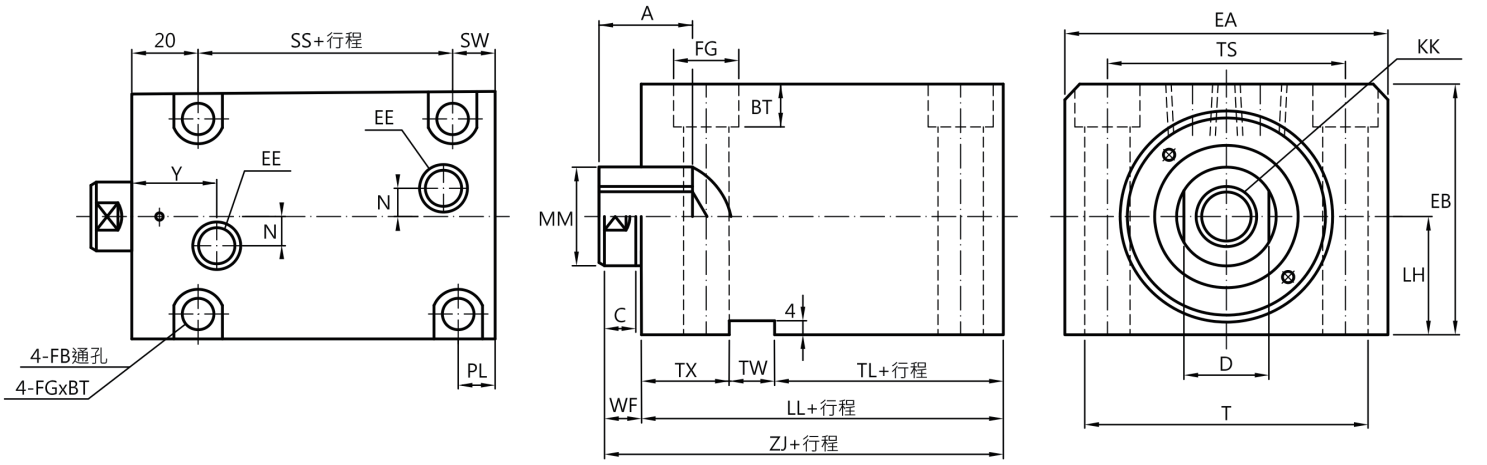

尺寸 Size / 內徑 Bore	A	BT		C	D	E	EA	EB	EE	FB		FG		KK	LH	LL	MM	N	PL	SS	SW	T	TL	TS	TV	TW	TX	WF	Y	ZJ
		SD	LA							SD	LA	SD	LA																	
Ø20	10	5.4	-	7	10	44	-	-	1/8”	5.5	-	9.5	-	M8x1.25	-	43	12	0	12	-	-	-	-	-	30	-	-	8	20.5	51
Ø25	12	5.4	-	7	12	50	-	-	1/8”	5.5	-	9.5	-	M10x1.5	-	45	14	0	12	-	-	-	-	-	36	-	-	8	20.5	53
Ø32	15	6.5	8.6	9	17	62	70	56	1/4”	7	9	11	14	M12x1.75	25	54	20	10	12	24	10	63	14	56	47	12	28	10	27	64
Ø40	20	8.6	10.8	9	21	70	80	64	1/4”	9	11	14	17.5	M16x2.0	29	55	25	10	12	23	12	70	15	62	52	12	28	10	27	65
Ø50	24	10.8	13	9	24	80	94	74	1/4”	11	14	17.5	20	M20x2.5	34	60	30	10	13	27	13	80	17	74	58	14	29	11	28	71
Ø63	33	13	15.2	11	30	94	114	89	1/4”	14	16	20	23	M27x3.0	42	67	35	10	13	32	15	100	20	90	69	16	31	13	30	80
Ø80	33	15.2	-	14	35	114	-	-	3/8”	16	-	23	-	M30x3.5	-	78	40	15	18	-	-	-	-	-	86	-	-	17	35	95
Ø100	40	17.5	-	14	40	134	-	-	3/8”	18	-	26	-	M36x4.0	-	82	45	15	18	-	-	-	-	-	102	-	-	17	39	99

SD型 雙軸 Twin Shaft

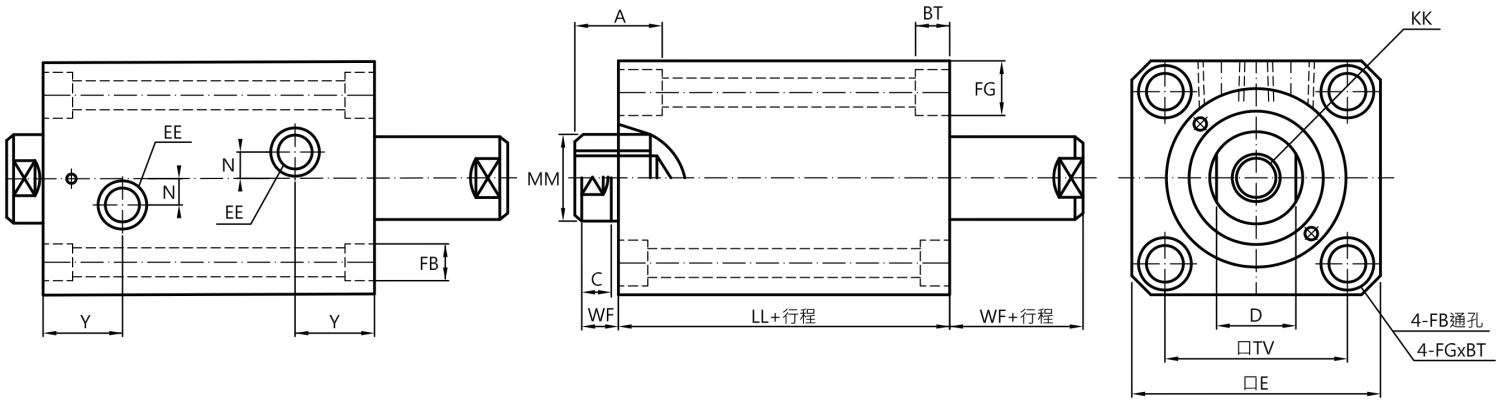

LA型 雙軸 Twin Shaft

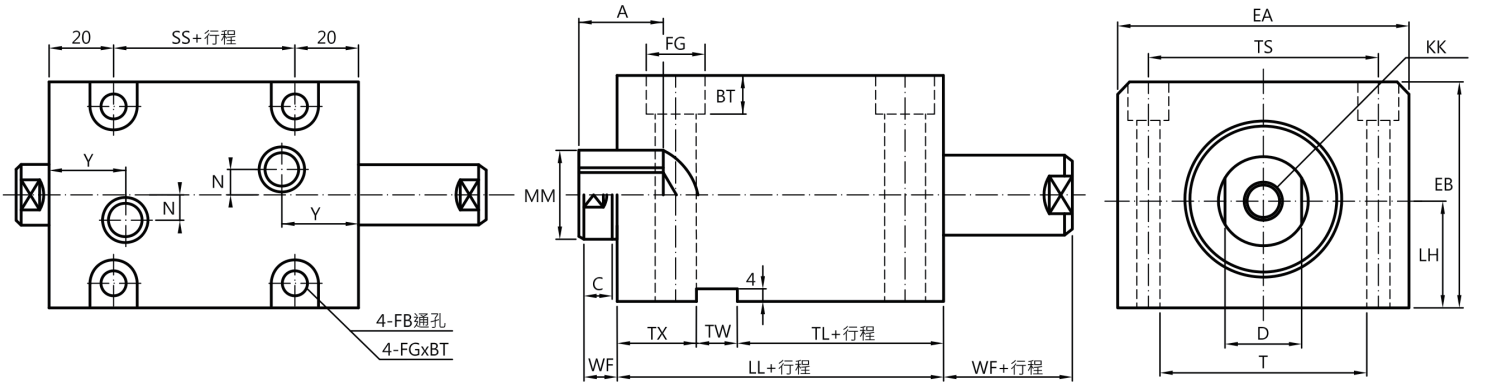

尺寸 Size / 內徑 Bore	A	BT		C	D	E	EA	EB	EE	FB		FG		KK	LH	LL	MM	N	SS	T	TL	TS	TV	TW	TX	WF	Y
		SD	LA							SD	LA	SD	LA														
Ø20	10	5.4	-	7	10	44	-	-	1/8”	5.5	-	9.5	-	M8x1.25	-	54	12	0	-	-	-	-	30	-	-	8	20.5
Ø25	12	5.4	-	7	12	50	-	-	1/8”	5.5	-	9.5	-	M10x1.5	-	56	14	0	-	-	-	-	36	-	-	8	20.5
Ø32	15	6.5	8.6	9	17	62	70	56	1/4”	7	9	11	14	M12x1.75	25	69	20	10	32	63	29	56	47	12	28	10	27
Ø40	20	8.6	10.8	9	21	70	80	64	1/4”	9	11	14	17.5	M16x2.0	29	71	25	10	32	70	31	62	52	12	28	10	27
Ø50	24	10.8	13	9	24	80	94	74	1/4”	11	14	17.5	20	M20x2.5	34	77	30	10	35	80	34	74	58	14	29	11	28
Ø63	33	13	15.2	11	30	94	114	89	1/4”	14	16	20	23	M27x3.0	42	83	35	10	42	100	36	90	69	16	31	13	30
Ø80	33	15.2	-	14	35	114	-	-	3/8”	16	-	23	-	M30x3.5	-	95	40	15	-	-	-	-	86	-	-	17	35
Ø100	40	17.5	-	14	40	134	-	-	3/8”	18	-	26	-	M36x4.0	-	106	45	15	-	-	-	-	102	-	-	17	39

宇 桔 工 業 股 份 有 限 公 司
YU KU INDUSTRY CO., LTD.
台 中 市 霧 峰 區 吉 峰 路 56 巷 7 號
No. 7, Ln. 56, Jifeng Rd., Wufeng Dist.,
Taichung City 41303, Taiwan (R. O. C.)
TEL:04-23334358
FAX:04-23334355
E-mail:j4730@ms41.hinet.net